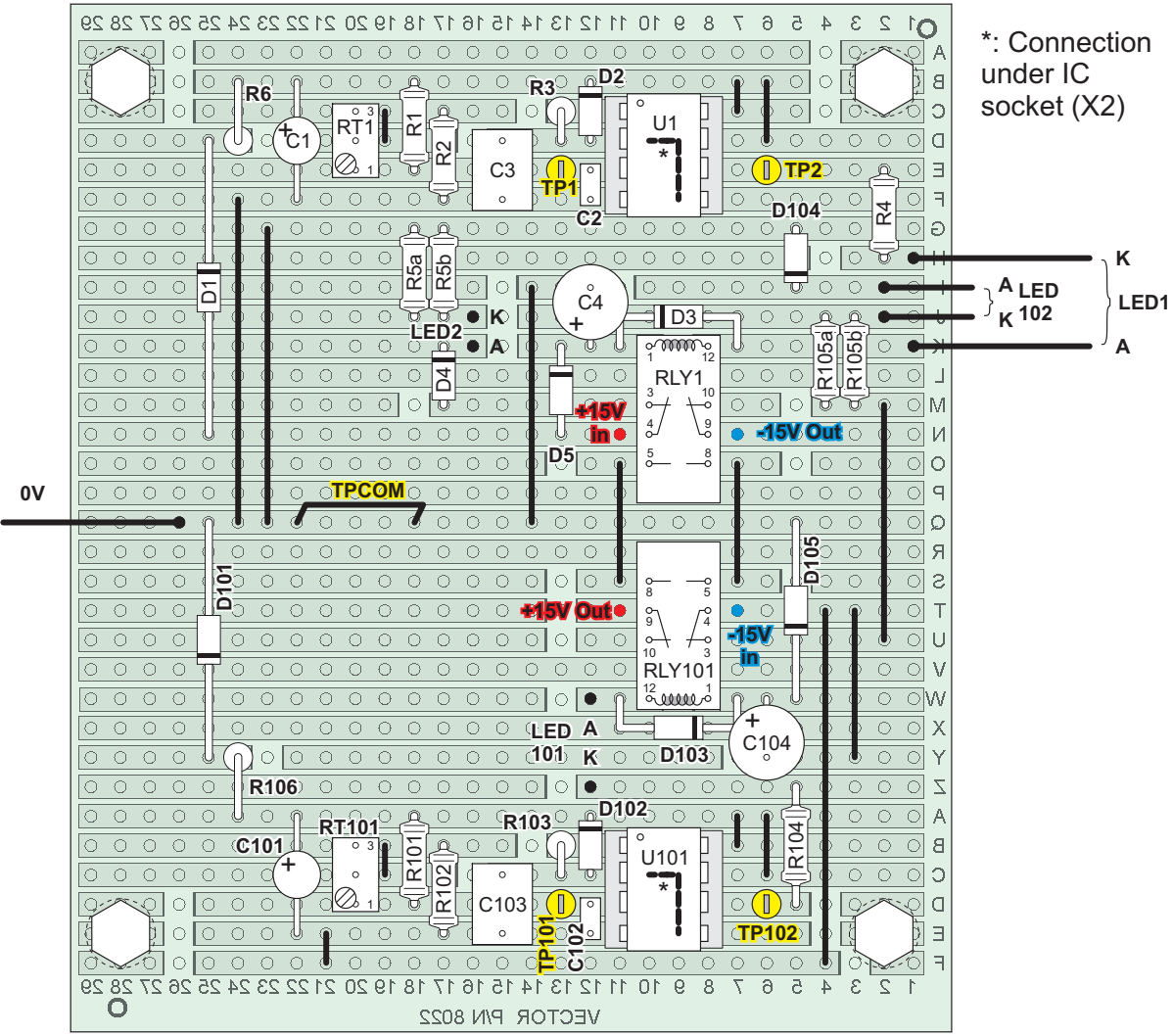
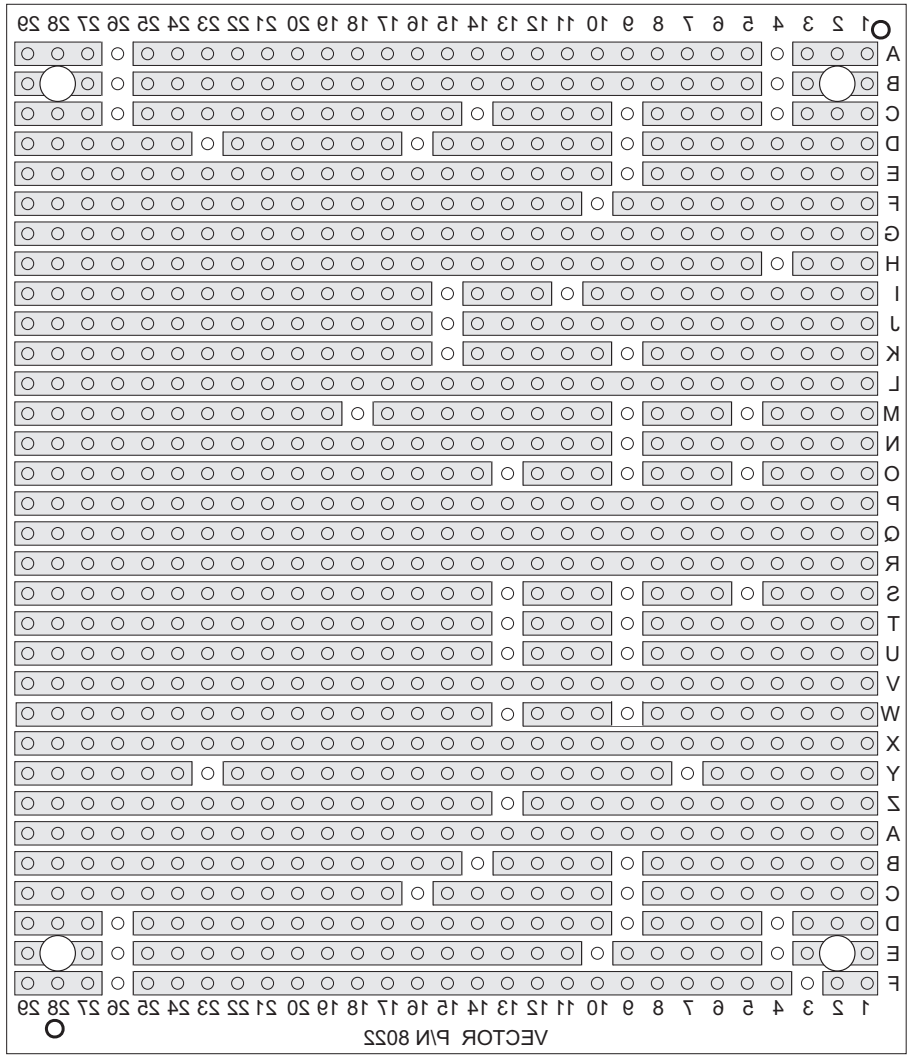
*: Connection under IC socket (X2)