NAiS

PROGRAMMABLE CONTROLLER

FP SERIES FP0

Hardware

NAiS is the worldwide brand name of automation control products from Matsushita Electric Works.

BEFORE BEGINNING

This manual and everything described in it are copyrighted. You may not copy this manual, in whole or part, without written consent of Matsushita Electric Works, Ltd.

Matsushita Electric Works, Ltd. pursues a policy of continuous improvement of the design and performance of its products, therefore, we reserve the right to change the manual/product without notice. In no event will Matsushita Electric Works, Ltd. be liable for direct, special, incidental, or consequential damage resulting from any defect in the product or its documentation, even if advised of the possibility of such damages.

LIMITED WARRANTY

All implied warranties on the product, including merchantability and fitness, are limited to one year from the date of purchase.

If physical defects caused by distribution are found, Matsushita Electric Works, Ltd., will replace/repair the product free of charge. Exceptions include:

- **When physical defects are due to different usage/treatment of the product other than described in the manual.**
- **When physical defects are due to defective equipment other than the distributed product.**
- **When physical defects are due to modifications/repairs by someone other than Matsushita Electric Works, Ltd.**
- **When physical defects are due to natural disasters.**

MS-DOS and Windows are registered trademarks of Microsoft Corporation.
IBM Personal Computer AT is a registered trademark of the International Business Machines Corporation.

Introduction

This manual explains hardware configurations, installation, wiring procedures, I/O allocations and maintenance.

Before You Start

Installation environment

Do not use the unit where it will be exposed to the following:

- **Direct sunlight and ambient temperatures outside the range of 0°C to 55°C/32°F to 131°F.**
- **Ambient humidity outside the range of 30% to 85% RH and sudden temperature changes causing condensation.**
- **Inflammable or corresive gas.**
- **Excessive vibration or shock.**
- **Excessive airborne dust or metal particles**
- **Water in any from including spray or mist.**
- **Benzine, paint thinner, alcohol or other organic solvents or strong alkaline solutions such as ammonia or caustic soda.**
- **Influence from power transmission lines, high voltage equipment, power cables, power equipment, radio transmitters, or any other equipment that would generate high switching surges.**

Static electricity

- **In dry locations, excessive static electricity can cause problems. Before touching the unit, always touch a grounded piece of metal in order to discharge static electricity.**

Cleaning

- **Do not use thinner based cleaners because they deform the unit case and fade the colors.**

Power supplies

- **An insulated power supply with an internal protective circuit should be used. The power supply for the FP0 control unit operation is a non-insulated circuit, so if an incorrect voltage is directly applied, the internal circuit may be damaged or destroyed. If using a power supply without a protective circuit, power should be supplied through a protective element such as a fuse.**

Power supply sequence

- **Have the power supply sequence such that the power supply of the FP0 control unit turns OFF before the power supply for I/O.**
- **If the power supply for I/O is turned OFF before the power supply of FP0 control unit, the FP0 control unit will detect the input fluctuations and may begin an unscheduled operation.**

Before turning ON the power

When turning ON the power for the first time, be sure to take the precautions given below.

- **When carrying out construction, check to make sure that there are no scraps of wiring, particularly conductive fragments, adhering to the unit.**
- **Verify that the power supply wiring, I/O wiring, and power supply voltage are all correct.**
- **Sufficiently tighten the installation screws and terminal screws.**
- **Set the mode switch to PROG. mode.**

Table of Contents

Chapter 1 Overview

1.1 Components . . . . . 1 - 3
1.1.1 Control Units . . . . . 1 - 3
1.1.2 Expansion Units . . . . . 1 - 4
1.1.2.1 Expansion I/O Units . . . . . 1 - 4
1.1.2.2 Intelligent Unit . . . . . 1 - 5
1.2 Expansion Possibilities . . . . . 1 - 6
1.3 Combination Possibilities . . . . . 1 - 7
1.3.1 Relay Output Type Units . . . . . 1 - 7
1.3.2 Transistor Output Type Units . . . . . 1 - 8
1.4 Programming Tools . . . . . 1 - 9

Chapter 2 Control Units

2.1 Parts and Terminology . . . . . 2 - 3
2.1.1 Control Unit Types . . . . . 2 - 4
2.1.1.1 Status Indicator LEDs . . . . . 2 - 6
2.1.1.2 Mode Switch . . . . . 2 - 6
2.1.1.3 Tool Port . . . . . 2 - 6
2.2 Specifications . . . . . 2 - 7
2.2.1 General Specifications . . . . . 2 - 7
2.2.1.1 Weight . . . . . 2 - 7
2.2.1.2 Current Consumed by the Control Unit . . . . . 2 - 8
2.2.2 Performance Specifications . . . . . 2 - 10
2.2.3 Input Specifications . . . . . 2 - 14
2.2.3.1 Limitations on Number of Simultaneous Input ON Points . . . . . 2 - 15
2.2.4 Output Specifications . . . . . 2 - 16
2.2.4.1 Relay Output Type . . . . . 2 - 16
2.2.4.2 Transistor Output Type . . . . . 2 - 17
2.3 Internal Circuit Diagram . . . . . 2 - 18
2.3.1 Relay Output Type (C10RS/C10CRS/C10RM/C10CRM/ C14RS/C14CRS/C14RM/C14CRM) . . . . . 2 - 18
2.3.2 Transistor Output Type . . . . . 2 - 19
2.3.2.1 NPN Open Collector Type (C16T/C16CT/C32T/C32CT) . . . . . 2 - 19
2.3.2.2 PNP Open Collector Type (C16P/C16CP/C32P/C32CP) . . . . . 2 - 21
2.4 Pin Layouts . . . . . 2 - 22
2.4.1 C10RS/C10CRS/C10RM/C10CRM . . . . . 2 - 22
2.4.2 C14RS/C14CRS/C14RM/C14CRM . . . . . 2 - 22
2.4.3 C16T/C16CT . . . . . 2 - 23
2.4.4 C16P/C16CP . . . . . 2 - 24

2.4.5 C32T/C32CT . . . . . 2 - 25
2.4.6 C32P/C32CP . . . . . 2 - 26

Chapter 3 Expansion I/O Units

3.1 Parts and Terminology . . . . . 3 - 3
3.1.1 Expansion I/O Unit Types . . . . . 3 - 4
3.2 Specifications . . . . . 3 - 6
3.2.1 General Specifications . . . . . 3 - 6
3.2.2 Input Specifications . . . . . 3 - 6
3.2.2.1 Limitations on Number of Simultaneous Input ON Points . . . . . 3 - 7
3.2.3 Output Specifications . . . . . 3 - 8
3.2.3.1 Relay Output Type . . . . . 3 - 8
3.2.3.2 Transistor Output Type . . . . . 3 - 9
3.3 Internal Circuit Diagram . . . . . 3 - 10
3.3.1 Relay Output Type (E8RS/E8RM/E16RS/E16RM) . . . . . 3 - 10
3.3.2 Transistor Output Type . . . . . 3 - 11
3.3.2.1 NPN Open Collector Type (E16T/E32T) . . . . . 3 - 11
3.3.2.2 PNP Open Collector Type (E16P/E32P) . . . . . 3 - 13
3.3.3 Expansion Input Units (E8X/E16X) . . . . . 3 - 14
3.3.4 Expansion Output Units . . . . . 3 - 15
3.3.4.1 NPN Open Collector Type (E8YT/E16YT) . . . . . 3 - 15
3.3.4.2 PNP Open Collector Type (E8YP/E16YP) . . . . . 3 - 17
3.4 Pin Layouts . . . . . 3 - 18
3.4.1 E8RS/E8RM . . . . . 3 - 18
3.4.2 E16RS/E16RM . . . . . 3 - 19
3.4.3 E16T . . . . . 3 - 20
3.4.4 E16P . . . . . 3 - 21
3.4.5 E32T . . . . . 3 - 22
3.4.6 E32P . . . . . 3 - 23
3.4.7 E8X . . . . . 3 - 24
3.4.8 E16X . . . . . 3 - 25
3.4.9 E8YT . . . . . 3 - 26
3.4.10 E8YP . . . . . 3 - 26
3.4.11 E16YT . . . . . 3 - 27
3.4.12 E16YP . . . . . 3 - 28

Chapter 4 Analog I/O Unit

4.1 Parts and Terminology . . . . . 4 - 3
4.1.1 Analog Mode Switch Setting . . . . . 4 - 4
4.1.2 Analog I/O Terminal . . . . . 4 - 4
4.2 Specifications . . . . . 4 - 5
4.2.1 General Specifications . . . . . 4 - 5
4.2.1.1 Weight . . . . . 4 - 5
4.2.2 Analog Input Specifications . . . . . 4 - 6

4.2.3 Analog Output Specifications . . . . . 4 - 8
4.3 A/D Conversion Characteristics . . . . . 4 - 9
4.4 D/A Conversion Characteristics . . . . . 4 - 12
4.5 Wiring . . . . . 4 - 13
4.5.1 Analog Input Wiring . . . . . 4 - 13
4.5.2 Analog Output Wiring . . . . . 4 - 14
4.6 Boosting the Precision of the Thermocouple Range . . . . . 4 - 16
4.7 Averaging Function . . . . . 4 - 17
4.7.1 Averaging for Voltage Ranges and Current Ranges . . . . . 4 - 17
4.7.2 Averaging for a Thermocouple Range . . . . . 4 - 18

Chapter 5 I/O Allocation

5.1 I/O Number . . . . . 5 - 3
5.2 Control Unit . . . . . 5 - 4
5.3 Expansion I/O Unit . . . . . 5 - 5
5.4 Analog I/O Unit . . . . . 5 - 6

Chapter 6 Installation

6.1 Adding Expansion Units . . . . . 6 - 3
6.2 Important Notes . . . . . 6 - 5
6.3 Attachment to DIN Rails . . . . . 6 - 8
6.4 Installation Using FP0 Slim Type Mounting Plate . . . . . 6 - 9
6.5 Installation Using FP0 Flat Type Mounting Plate . . . . . 6 - 10

Chapter 7 Wiring

7.1 Safety Instructions . . . . . 7 - 3
7.1.1 Interlock Circuit . . . . . 7 - 3
7.1.2 Emergency Stop Circuit . . . . . 7 - 3
7.1.3 Start Up Sequence . . . . . 7 - 3
7.1.4 Momentary Power Failures . . . . . 7 - 4
7.1.5 Protecting Power Supply and Output Sections . . . . . 7 - 4
7.2 Wiring the Power Supply to the Control Unit . . . . . 7 - 5
7.3 Grounding . . . . . 7 - 7
7.4 Input Wiring . . . . . 7 - 8
7.4.1 Sensors . . . . . 7 - 8
7.4.2 LED-Equipped Reed Switch . . . . . 7 - 9
7.4.3 Two-Wire Type Sensor . . . . . 7 - 9
7.4.4 LED-Equipped Limit Switch . . . . . 7 - 10
7.5 Output Wiring . . . . . 7 - 11
7.5.1 Protective Circuit for Inductive Loads . . . . . 7 - 11
7.5.2 Precautions for Using Capacitive Loads . . . . . 7 - 12
7.6 Wiring the Terminal Type . . . . . 7 - 13
7.7 Wiring the MOLEX Connector Type . . . . . 7 - 15

7.8 Wiring the MIL Connector Type . . . . . 7 - 17
7.8.1 Contact Puller Pin for Rewiring . . . . . 7 - 18
7.9 Wiring the RS232C Port . . . . . 7 - 19

Chapter 8 Connecting the I.O.P. Display Panel

8.1 Connecting the I.O.P. D01/D30/M01/M30 . . . . . 8 - 3
8.1.1 Connection Using the RS232C Port . . . . . 8 - 3
8.1.2 Connection Using the Tool Port . . . . . 8 - 4
8.2 Connecting the I.O.P. B01/B30 . . . . . 8 - 5
8.2.1 Connection Using the RS232C Port . . . . . 8 - 5
8.2.2 Connection Using the Tool Port . . . . . 8 - 6

Chapter 9 Trial Operation

9.1 Before Turning ON the Power . . . . . 9 - 3
9.2 Turning the Power ON . . . . . 9 - 4

Chapter 10 Self-Diagnostic and Troubleshooting

10.1 Self-Diagnostic Function . . . . . 10 - 3
10.1.1 Allowing Duplicated Output . . . . . 10 - 4
10.1.2 Continuing After an Operation Error . . . . . 10 - 4
10.2 Troubleshooting . . . . . 10 - 5
10.2.1 ERROR/ALARM LED is Blinking . . . . . 10 - 5
10.2.2 ERROR/ALARM LED is ON . . . . . 10 - 7
10.2.3 All LEDs are OFF . . . . . 10 - 7
10.2.4 Diagnosing Output Malfunction . . . . . 10 - 8
10.2.5 Communication Error with Programming Software . . . . . 10 - 10
10.2.6 PROTECT ERROR is Displayed . . . . . 10 - 11
10.2.7 Program Mode does not Change to RUN . . . . . 10 - 11
10.3 Error Codes . . . . . 10 - 12
10.3.1 Total-Check Function . . . . . 10 - 12
10.3.1.1 Syntax Check Error . . . . . 10 - 12
10.3.1.2 Self-Diagnostic Error . . . . . 10 - 13
10.3.2 Syntax Check Error Codes . . . . . 10 - 14
10.3.3 Self-Diagnostic Error Codes . . . . . 10 - 15

Appendix A Dimensions

A.1 Control Unit and Expansion I/O Unit . . . . . A - 3
A.1.1 FP0-C10RS/C10CRS/C14RS/C14CRS/E8RS/E16RS . . . . . A - 3
A.1.2 FP0-C10RM/C10CRM/C14RM/C14CRM/E8RM/E16RM . . . . . A - 3
A.1.3 FP0-C16T/C16CT/C16P/C16CP/E16T/E16P/E8X/E8YT/E8YP . . . . A - 4
A.1.4 FP0-C32T/C32CT/C32P/C32CP/E32T/E32P/E16X/E16YT/E16YP . . A - 4

A.2 Analog I/O Unit . . . . . A - 5
A.3 Mounting on DIN Rail . . . . . A - 6
A.4 FP0 Slim Type Mounting Plate . . . . . A - 7
A.5 FP0 Flat Type Mounting Plate . . . . . A - 8

Index . . . . . I - 1

Record of changes . . . . . R - 1

Chapter 1

Overview

1.1 Components . . . . . 1 - 3

1.1.1 Control Units . . . . . 1 - 3

1.1.2 Expansion Units . . . . . 1 - 4

1.1.2.1 Expansion I/O Units . . . . . 1 - 4

1.1.2.2 Intelligent Unit . . . . . 1 - 5

1.2 Expansion Possibilities . . . . . 1 - 6

1.3 Combination Possibilities . . . . . 1 - 7

1.3.1 Relay Output Type Units . . . . . 1 - 7

1.3.2 Transistor Output Type Units . . . . . 1 - 8

1.4 Programming Tools . . . . . 1 - 9

1.1 Components

1.1.1 Control Units

10 points (**Input: 6**, **Relay output: 4**)

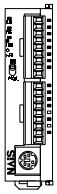

Terminal type
FP0-C10RS

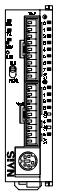

MOLEX type
FP0-C10RM

10 points with RS232C port (**Input: 6**, **Relay output: 4**)

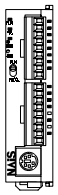

Terminal type
FP0-C10CRS

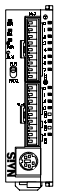

MOLEX type
FP0-C10CRM

14 points (**Input: 8**, **Relay output: 6**)

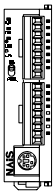

Terminal type
FP0-C14RS

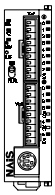

MOLEX type
FP0-C14RM

14 points with RS232C port (**Input: 8**, **Relay output: 6**)

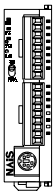

Terminal type
FP0-C14CRS

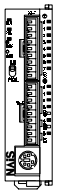

MOLEX type
FP0-C14CRM

16 points (**Input: 8**, **Transistor output: 8**)

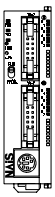

MIL type
NPN open collector: **FP0-C16T**
PNP open collector: **FP0-C16P**

16 points with RS232C port (**Input: 8**, **Transistor output: 8**)

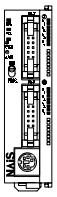

MIL type
NPN open collector: **FP0-C16CT**
PNP open collector: **FP0-C16CP**

32 points (**Input: 16**, **Transistor output: 16**)

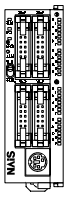

MIL type
NPN open collector: **FP0-C32T**
PNP open collector: **FP0-C32P**

32 points with RS232C port (**Input: 16**, **Transistor output: 16**)

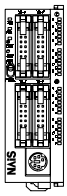

MIL type
NPN open collector: **FP0-C32CT**
PNP open collector: **FP0-C32CP**

1.1.2 Expansion Units

1.1.2.1 Expansion I/O Units

8 points (**Input: 4**, **Relay output: 4**)

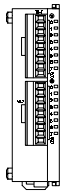

Terminal type
FP0-E8RS

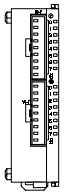

MOLEX type
FP0-E8RM

16 points (**Input: 8**, **Relay output: 8**)

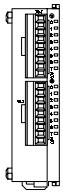

Terminal type
FP0-E16RS

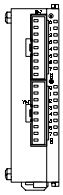

MOLEX type
FP0-E16RM

16 points (**Input: 8**, **Transistor output: 8**)

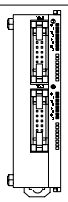

MIL type
NPN open collector: **FP0-E16T**
PNP open collector: **FP0-E16P**

32 points (**Input: 16**, **Transistor output: 16**)

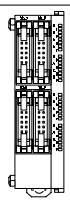

MIL type
NPN open collector: **FP0-E32T**
PNP open collector: **FP0-E32P**

8 points (Input: 8)

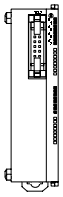

MIL type
FP0-E8X

16 points (Input: 16)

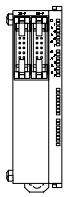

MIL type
FP0-E16X

8 points (Transistor output: 8)

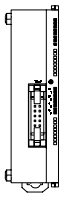

MIL type
NPN open collector: **FP0-E8YT**
PNP open collector: **FP0-E8YP**

16 points (Transistor output: 16)

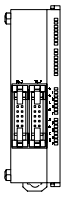

MIL type
NPN open collector: **FP0-E16YT**
PNP open collector: **FP0-E16YP**

1.1.2.2 Intelligent Unit

Analog I/O unit (**Input: 2 channels**
Output: 1 channel)

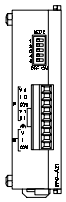

FP0-A21

1.2 Expansion Possibilities

Be sure to check that the units are added according to the following restrictions:

- **A maximum of three expansion I/O units or analog I/O units can be connected to one control unit.**
- **There are no restrictions on the combinations of the kind control units and expansion units.**
- **A combination of relay output types and transistor output types is also possible.**
- **The expansion unit can be attached directly to the control unit easily. Special expansion cables, backplanes, and so forth, are unnecessary as the expansion unit employs a stacking system that uses expansion connector and expansion hooks on the surface of the unit itself.**

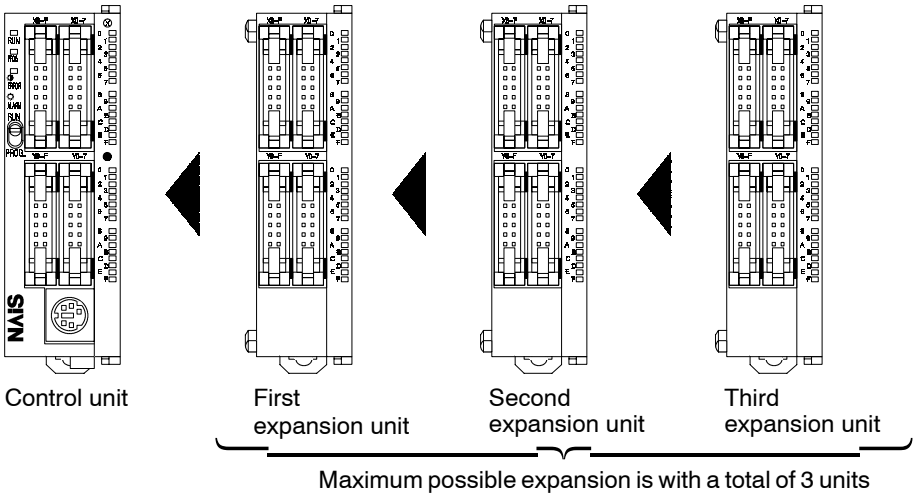

Contollable I/O Points

Type of control unit	Control unit only	When the expansion unit is the same output type as the control unit	When the expansion unit is a transistor output type
C10R	10 points	max. 58 points	max. 106 points
C14R	14 points	max. 62 points	max. 110 points
C16T/C16P	16 points	max. 112 points	max. 112 points
C32T/C32P	32 points	max. 128 points	max. 128 points

1.3 Combination Possibilities

1.3.1 Relay Output Type Units

Total number of I/O points	=	Control unit	+	First expansion I/O unit	+	Second expansion I/O unit	+	Third expansion I/O unit
10 (Input: 6, Output: 4)	=	10 (Input: 6, Output: 4)						
14 (Input: 8, Output: 6)	=	14 (Input: 8, Output: 6)						
18 (Input: 10, Output: 8)	=	10 (Input: 6, Output: 4)	+	8 (Input: 4, Output: 4)				
22 (Input: 12, Output: 10)	=	14 (Input: 8, Output: 6)	+	8 (Input: 4, Output: 4)				
26 (Input: 14, Output: 12)	=	10 (Input: 6, Output: 4)	+	16 (Input: 8, Output: 8)				
	=	10 (Input: 6, Output: 4)	+	8 (Input: 4, Output: 4)	+	8 (Input: 4, Output: 4)		
30 (Input: 16, Output: 14)	=	14 (Input: 8, Output: 6)	+	16 (Input: 8, Output: 8)				
	=	14 (Input: 8, Output: 6)	+	8 (Input: 4, Output: 4)	+	8 (Input: 4, Output: 4)		
34 (Input: 18, Output: 16)	=	10 (Input: 6, Output: 4)	+	16 (Input: 8, Output: 8)	+	8 (Input: 4, Output: 4)		
	=	10 (Input: 6, Output: 4)	+	8 (Input: 4, Output: 4)	+	8 (Input: 4, Output: 4)	+	8 (Input: 4, Output: 4)
38 (Input: 20, Output: 18)	=	14 (Input: 8, Output: 6)	+	16 (Input: 8, Output: 8)	+	8 (Input: 4, Output: 4)		
	=	14 (Input: 8, Output: 6)	+	8 (Input: 4, Output: 4)	+	8 (Input: 4, Output: 4)	+	8 (Input: 4, Output: 4)
42 (Input: 22, Output: 20)	=	10 (Input: 6, Output: 4)	+	16 (Input: 8, Output: 8)	+	16 (Input: 8, Output: 8)		
	=	10 (Input: 6, Output: 4)	+	16 (Input: 8, Output: 8)	+	8 (Input: 4, Output: 4)	+	8 (Input: 4, Output: 4)
46 (Input: 24, Output: 22)	=	14 (Input: 8, Output: 6)	+	16 (Input: 8, Output: 8)	+	16 (Input: 8, Output: 8)		
	=	14 (Input: 8, Output: 6)	+	16 (Input: 8, Output: 8)	+	8 (Input: 4, Output: 4)	+	8 (Input: 4, Output: 4)
50 (Input: 26, Output: 24)	=	10 (Input: 6, Output: 4)	+	16 (Input: 8, Output: 8)	+	16 (Input: 8, Output: 8)	+	8 (Input: 4, Output: 4)
54 (Input: 28, Output: 26)	=	14 (Input: 8, Output: 6)	+	16 (Input: 8, Output: 8)	+	16 (Input: 8, Output: 8)	+	8 (Input: 4, Output: 4)
58 (Input: 30, Output: 28)	=	10 (Input: 6, Output: 4)	+	16 (Input: 8, Output: 8)	+	16 (Input: 8, Output: 8)	+	16 (Input: 8, Output: 8)
62 (Input: 32, Output: 30)	=	14 (Input: 8, Output: 6)	+	16 (Input: 8, Output: 8)	+	16 (Input: 8, Output: 8)	+	16 (Input: 8, Output: 8)

1.3.2 Transistor Output Type Units

Total number of I/O points	=	Control unit	+	First expansion I/O unit	+	Second expansion I/O unit	+	Third expansion I/O unit
16 (Input: 8, Output: 8)	=	**16** (Input: 8, Output: 8)						
32 (Input: 16, Output: 16)	=	**32** (Input: 16, Output: 16)						
	=	**16** (Input: 8, Output: 8)	+	**16** (Input: 8, Output: 8)				
48 (Input: 24, Output: 24)	=	**32** (Input: 16, Output: 16)	+	**16** (Input: 8, Output: 8)				
	=	**16** (Input: 8, Output: 8)	+	**32** (Input: 16, Output: 16)				
	=	**16** (Input: 8, Output: 8)	+	**16** (Input: 8, Output: 8)	+	**16** (Input: 8, Output: 8)		
64 (Input: 32, Output: 32)	=	**32** (Input: 16, Output: 16)	+	**32** (Input: 16, Output: 16)				
	=	**32** (Input: 16, Output: 16)	+	**16** (Input: 8, Output: 8)	+	**16** (Input: 8, Output: 8)		
	=	**16** (Input: 8, Output: 8)	+	**32** (Input: 16, Output: 16)	+	**16** (Input: 8, Output: 8)		
	=	**16** (Input: 8, Output: 8)	+	**16** (Input: 8, Output: 8)	+	**16** (Input: 8, Output: 8)	+	**16** (Input: 8, Output: 8)
80 (Input: 40, Output: 40)	=	**32** (Input: 16, Output: 16)	+	**32** (Input: 16, Output: 16)	+	**16** (Input: 8, Output: 8)		
	=	**32** (Input: 16, Output: 16)	+	**16** (Input: 8, Output: 8)	+	**16** (Input: 8, Output: 8)	+	**16** (Input: 8, Output: 8)
	=	**16** (Input: 8, Output: 8)	+	**32** (Input: 16, Output: 16)	+	**32** (Input: 16, Output: 16)		
	=	**16** (Input: 8, Output: 8)	+	**32** (Input: 16, Output: 16)	+	**16** (Input: 8, Output: 8)	+	**16** (Input: 8, Output: 8)
96 (Input: 48, Output: 48)	=	**32** (Input: 16, Output: 16)	+	**32** (Input: 16, Output: 16)	+	**32** (Input: 16, Output: 16)		
	=	**32** (Input: 16, Output: 16)	+	**32** (Input: 16, Output: 16)	+	**16** (Input: 8, Output: 8)	+	**16** (Input: 8, Output: 8)
	=	**16** (Input: 8, Output: 8)	+	**32** (Input: 16, Output: 16)	+	**32** (Input: 16, Output: 16)	+	**16** (Input: 8, Output: 8)
112 (Input: 56, Output: 56)	=	**32** (Input: 16, Output: 16)	+	**32** (Input: 16, Output: 16)	+	**32** (Input: 16, Output: 16)	+	**16** (Input: 8, Output: 8)
	=	**16** (Input: 8, Output: 8)	+	**32** (Input: 16, Output: 16)	+	**32** (Input: 16, Output: 16)	+	**32** (Input: 16, Output: 16)
128 (Input: 64, Output: 64)	=	**32** (Input: 16, Output: 16)	+	**32** (Input: 16, Output: 16)	+	**32** (Input: 16, Output: 16)	+	**32** (Input: 16, Output: 16)

1.4 Programming Tools

Type		Description	Order number
PC software	**FPSOFT Ver. 1**	Program editing software for windows for use with commercially available computers. (System required: IBM PC486/66 or up with 8 MB RAM, 7 MB disk free space, and Windows 3.1 or newer)	AFP266511
	NPST-GR software Ver.4	Program editing software for use with commercially available computers. (System required: IBM PC-AT or 100 % compatible with 800 KB or more EMS, 2 MB or more hard disk space, MS-DOS Ver. 6.2 or later, and EGA or VGA display mode)	AFP266541
	NPST-GR software Ver.3 (* Note 1)		AFP266538
	FP PC cable	Cable needed for connection between the tool port of FP0 control unit and the RS232C port (25 pins) of RS232C port adapter.	AFC8513 (3 m/9.84 ft.) (* Note 2)
Programmer	**FP programmer II Ver. 2**	Handheld programming device	AFP1114V2
	FP peripheral cable	Cable needed for connection between the tool port of FP0 control unit and the FP programmer II's communication port.	AFC8521 (1m/3.28ft.) AFC8523 (3m/9.84ft.)

☞ **Notes**

- **(*1): When NPST-GR Ver. 3 and previous FP programmers (AFP1112A/AFP1114) are used, reading and writing of the following FP0 instructions are not possible and the functions cannot be used.**
  - **High-speed counter function (related instructions: F166/F167)**
  - **Pulse output function (related instructions: F168/F169)**
  - **PWM output function (related instruction: F170)**
  - **1 ms unit timer instruction (TML)**
  - **32-bit auxiliary timer instruction (F183)**
  - **Changing the communication baud rate to 19,200 bps (factory setting is 9600 bps)**
- **(*2): If the FP PC cable (AFC8513) is to be connected to a computer (IBM PC/AT compatible), use a commercially available 9 pin - 25 pin port adapter.**

1.4 Programming Tools

Chapter 2

Control Units

2.1 Parts and Terminology . . . . . 2 - 3

2.1.1 Control Unit Types . . . . . 2 - 4

2.1.1.1 Status Indicator LEDs . . . . . 2 - 6

2.1.1.2 Mode Switch . . . . . 2 - 6

2.1.1.3 Tool Port . . . . . 2 - 6

2.2 Specifications . . . . . 2 - 7

2.2.1 General Specifications . . . . . 2 - 7

2.2.1.1 Weight . . . . . 2 - 7

2.2.1.2 Current Consumed by the Control Unit . . . . . 2 - 8

2.2.2 Performance Specifications . . . . . 2 - 10

2.2.3 Input Specifications . . . . . 2 - 14

2.2.3.1 Limitations on Number of Simultaneous Input ON Points . . . . . 2 - 15

2.2.4 Output Specifications . . . . . 2 - 16

2.2.4.1 Relay Output Type . . . . . 2 - 16

2.2.4.2 Transistor Output Type . . . 2 - 17

2.3 Internal Circuit Diagram . . . . . 2 - 18

2.3.1 Relay Output Type (C10RS/C10CRS/C10RM/C10CRM/ C14RS/C14CRS/C14RM/C14CRM) . . . . 2 - 18

2.3.2 Transistor Output Type . . . . . 2 - 19

2.3.2.1 NPN Open Collector Type (C16T/C16CT/C32T/C32CT) . . 2 - 19

2.3.2.2 PNP Open Collector Type (C16P/C16CP/C32P/C32CP) . 2 - 21

☞ **next page**

2.4 Pin Layouts . . . . . 2 - 22
2.4.1 C10RS/C10CRS/C10RM/C10CRM 2 - 22
2.4.2 C14RS/C14CRS/C14RM/C14CRM 2 - 22
2.4.3 C16T/C16CT . . . . . 2 - 23
2.4.4 C16P/C16CP . . . . . 2 - 24
2.4.5 C32T/C32CT . . . . . 2 - 25
2.4.6 C32P/C32CP . . . . . 2 - 26

2.1 Parts and Terminology

There are sixteen different control unit types available:

1. C10RS terminal type
2. C14RS terminal type
3. C10CRS (with RS232C port) terminal type
4. C14CRS (with RS232C port) terminal type
5. C10RM connector type
6. C14RM connector type
7. C10CRM (with RS232C port) connector type
8. C14CRM (with RS232C port) connector type
9. C16T
10. C16P
11. C16CT (with RS232C port)
12. C16CP (with RS232C port)
13. C32T
14. C32P
15. C32CT (with RS232C port)
16. C32CP (with RS232C port)

In the next sections you will find a detailed description of each control unit.

2.1.1 Control Unit Types

C10RS/C14RS
C10CRS/C14CRS
(terminal type)

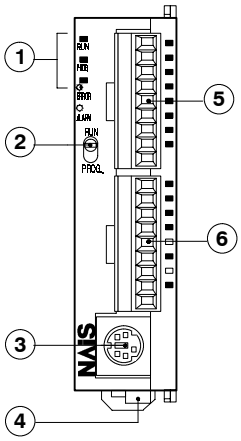

C10RM/C14RM
C10CRM/C14CRM
(connector type)

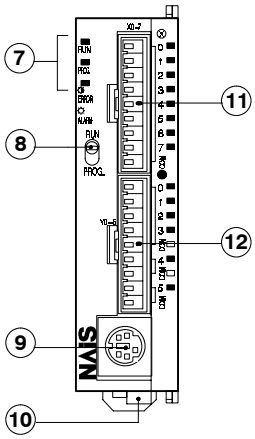

All control unit types

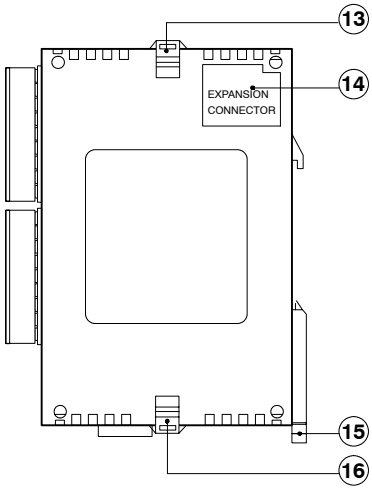

C16T/C16CT
C16P/C16CP

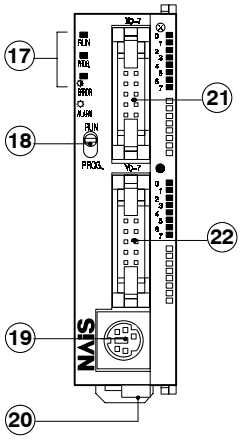

C32T/C32CT
C32P/C32CP

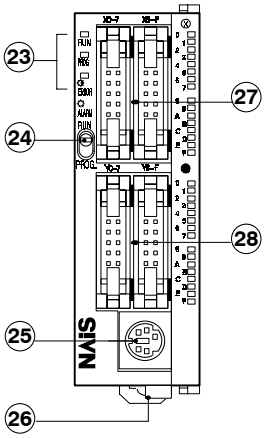

Control unit with RS232C port

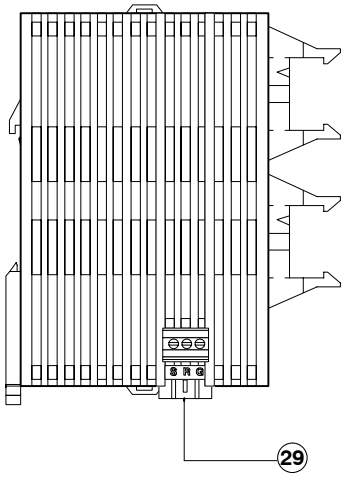

① ⑦ ⑰ ㉓ Status indicator LEDs

display the operation mode and error statuses (*section 2.1.1.1).

② ⑧ ⑱ ㉔ Mode switch

changes the operation mode (*section 2.1.1.2).

③ ⑨ ⑲ ㉕ Tool port (RS232C)

is used to connect a programming tool (*section 2.1.1.3).

④ ⑩ ⑳ ㉖ Power supply connector

Supply 24 V DC. It is connected using the power supply cable (AFP0581) that comes with the unit.

⑤ Input terminal (9-pin)

⑥ Output terminal (9-pin)

The input and output terminals (⑤ and ⑥) use a terminal block socket made by Phoenix Contact Co. (product number: 1840434) (*section 7.6).

⑪ Input connector (9-pin)

⑫ Output connector (9-pin)

The input and output connectors (⑪ and ⑫) use a connector made by Molex Japan Co. (product number: 51067-0900) (*section 7.7).

⑬ ⑯ Expansion hook

is used to secure expansion units. The hook is also used for installation on FP0 flat type mounting plate (AFP0804).

⑭ Expansion connector

connects an expansion unit to the internal circuit of the control unit (*section 6.1).

⑮ DIN rail attachment lever

allows simple attachment to a DIN rail.

The lever is also used for installation on FP0 slim type mounting plate (AFP0803).

㉑ Input connector (10-pin)

㉒ Output connector (10-pin)

Use a MIL type connector for the input and output connectors (㉑ and ㉒) (*section 7.8).

㉗ Input connectors (10-pin × 2)

㉘ Output connectors (10-pin × 2)

Use a MIL type connector for the input and output connectors (㉗ and ㉘) (*section 7.8).

㉙ RS232C port

Use this port to connect to devices with an RS232C port, such as an I.O.P., a bar code reader, or an image checker, enabling data input and output. (*section 7.9).

2.1.1.1 Status Indicator LEDs

These LEDs display the current mode of operation or the occurrence of an error.

LED	Description
RUN (green)	Illuminates when in the RUN mode and indicates the execution of a program. It flashes during forced input/output.
PROG. (green)	Illuminates when in the PROG. mode and indicates that operation has stopped.
ERROR/ALARM (red)	Flashes when an error is detected during the self-diagnostic function. Illuminates if a hardware error occurs, or if operation slows because of the program, and the watchdog timer is activated.

2.1.1.2 Mode Switch

This switch turns ON and OFF (RUN/PROG.) the operation of the FP0. The FP0 can also be turned ON and OFF by the programming tool.

Switch position	Operation mode
RUN (upward)	This sets the RUN mode. The program is executed and operation begins.
PROG. (downward)	This sets the PROG. mode.

When performing remote switching from the programming tool, the position of the mode switch and the actual mode of operation may differ. Verify the mode with the status indicator LED. Otherwise, restart the FP0 and change the mode of operation with the mode switch.

2.1.1.3 Tool Port

The tool port is used to connect a programming tool.

Pin assignment

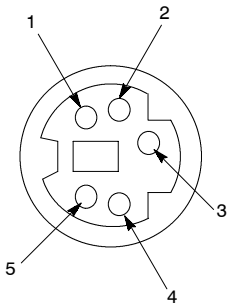

Pin no.	Abbreviation
1	—
2	SD (TXD)
3	SG
4	RD (RXD)
5	+ 5 V

2.2 Specifications

2.2.1 General Specifications

Item		Description
Rated operating voltage		24 V DC
Operating voltage range		21.6 V to 26.4 V DC
Rated current consumption		300 mA or less (*section 2.2.1.2)
Allowed momentary power off time	**C10/C14**	5 ms at 21.6 V, 10 ms at 24 V
	C16/C32	10 ms at 21.6 V, 10 ms at 24 V
Ambient temperature		0 °C to +55 °C/32 °F to +131 °F
Storage temperature		-20 °C to +70 °C/-4 °F to +158 °F
Ambient humidity		30 % to 85 % RH (non-condensing)
Storage humidity		30 % to 85 % RH (non-condensing)
Breakdown voltage		500 V AC for 1 minute between I/O terminal and power supply/ground terminal 1500 V AC for 1 minute between I/O terminal and power supply/ground terminal (relay output type only)
Insulation resistance		min. 100 MΩ (measured with a 500 V DC megger) between I/O terminal and ground terminal
Vibration resistance		10 Hz to 55 Hz, 1 cycle/min: double amplitude of 0.75 mm/ 0.030 in., 10 min on 3 axes
Shock resistance		Shock of 98 m/s^2 or more, 4 times on 3 axes
Noise immunity		1,000 Vp-p with pulse widths 50 ns and 1 μs (based on in-house measurements)
Operating condition		Free from corrosive gases and excessive dust

2.2.1.1 Weight

Type	Weight
C10RS/C10CRS/C10RM/C10CRM	approx. 100 g/3.53 oz
C14RS/C14CRS/C14RM/C14CRM	approx. 105 g/3.70 oz
C16T/C16CT/C16P/C16CP	approx. 85 g/3.00 oz
C32T/C32CT/C32P/C32CP	approx. 115 g/4.06 oz
E8RS/E8RM	approx. 90 g/3.17 oz
E8X/E8YT/E8YP	approx. 65 g/2.29 oz
E16RS/E16RM	approx. 105 g/3.70 oz
E16T/E16P/E16X/E16YT/E16YP	approx. 70 g/2.47 oz
E32T/E32P	approx. 85 g/3.00 oz

2.2.1.2 Current Consumed by the Control Unit

The current consumed at the power supply connector of the control unit is the sum of the current consumed by of the various units being used.

Type		Current consumption (at 24 V DC)
Control unit	**C10RS, C10CRS, C10RM, C10CRM**	100 mA or less
	C14RS, C14CRS, C14RM, C14CRM	100 mA or less
	C16T, C16CT, C16P, C16CP	40 mA or less
	C32T, C32CT, C32P, C32CP	60 mA or less
Expansion I/O unit	**E8X**	10 mA or less
	E8YT, E8YP	15 mA or less
	E8RS, E8RM, E16RS, E16RM, E16X	20 mA or less
	E16YT, E16YP, E16T, E16P	25 mA or less
	E32T, E32P	40 mA or less
Analog I/O unit	**A21**	20 mA or less
FP Programmer II Ver. 2 (AFP1114V2)		50 mA or less
C-NET adapter S2 type (AFP15402)		50 mA or less

Current consumed when the unit requires an external power supply
With a relay output type of expansion I/O unit and an analog I/O unit, it is necessary to provide a power supply to drive internal circuits.

Type		Current consumption (at 24 V DC)
Expansion I/O unit	**E8RS, E8RM**	50 mA
	E16RS, E16RM	100 mA
Analog I/O unit	**A21**	100 mA

Current consumption example

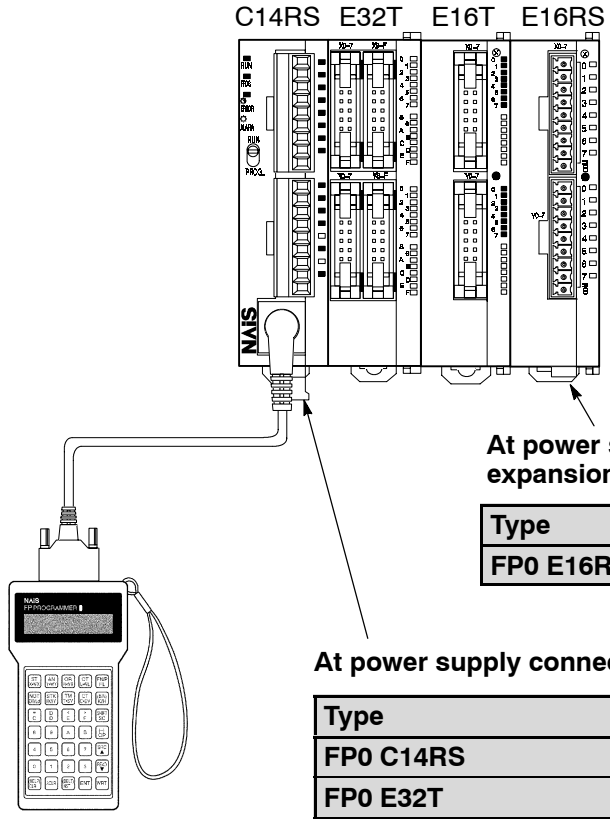

FP Programmer II Ver. 2

At power supply connector of expansion I/O unit FP0 E16RS

Type	Current consumption
FP0 E16RS	100 mA

At power supply connector of control unit

Type	Current consumption
FP0 C14RS	100 mA
FP0 E32T	40 mA
FP0 E16T	25 mA
FP0 E16RS	20 mA
FP Programmer II Ver. 2	50 mA
Total current consumption	235 mA or less

2.2.2 Performance Specifications

Item			Relay output type		Transistor output type	
			C10RS/C10CRS C10RM/C10CRM	C14RS/C14CRS C14RM/C14CRM	C16T/C16CT C16P/C16CP	C32T/C32CT C32P/C32CP
Programming method/Control method			Relay symbol/Cyclic operation			
Controllable I/O points		**Control unit only**	total: 10 (Input: 6 Output: 4)	total: 14 (Input: 8 Output: 6)	total: 16 (Input: 8 Output: 8)	total: 32 (Input: 16 Output: 16)
		When the expansion unit is the same output type as the control unit	max. 58	max. 62	max. 112	max. 128
		When the expansion unit is a transistor output type	max. 106	max. 110	max. 112	max. 128
Program memory			Built in EEPROM (no back-up battery required)			
Program capacity			2,720 steps			5,000 steps
Numbers of instruction		**Basic instruction**	83 types			
		High-level instruction	114 types			
Operation speed			0.9 μs/step (basic instruction)			
I/O update time and Base time			Without expansion: 0.3 ms With expansion: 0.3 ms + (1 × Number of expansion unit) ms			
Operation memory points	**Relays**	**Internal relay (R)**	1,008 points (R0 to R62F)			
		Special internal relay (R)	64 points (R9000 to R903F)			
		Timer/Counter (T/C)	144 points (initial setting is 100 timer points, T0 to T99 / 44 counter points, C100 to C143 (* Note) Timer range: 1 ms, 10 ms, 100 ms, 1 s; selected by instruction			

☞ **Note**

The proportion of timer points to counter points can be changed using a system register 5. See the * FP0 Programming Manual.

Item			Relay output type		Transistor output type	
			C10RS/C10CRS C10RM/C10CRM	C14RS/C14CRS C14RM/C14CRM	C16T/C16CT C16P/C16CP	C32T/C32CT C32P/C32CP
Operation memory points	Memory areas	Data register (DT)	1,660 words (DT0 to DT1659)			6,144 words (DT0 to DT6143)
		Special data register (DT)	112 words (DT9000 to DT9111)			
		Index registers (IX, IY)	2 words			
Differential points			Unlimited number of points			
Master control relay points (MCR)			32 points			
Number of labels (JP and LOOP)			64 labels			
Number of step ladders			128 stages			
Number of subroutines			16 subroutines			
Number of interrupt programs			7 programs (external: 6, internal: 1)			
Self-diagnostic function			Such as watchdog timer, program syntax check			
Memory backup (* Note)	Timer		Non-hold type: all points			
	Counter	Non-hold type	From set value to C139			From set value to C127
		Hold type	4 points (elapsed values) C140 to C143			16 points (elapsed values) C128 to C143
	Internal relay	Non-hold type	976 points (R0 to R60F) 61 words (WR0 to WR60)			880 points (R0 to R54F) 55 words (WR0 to WR54)
		Hold type	32 points (R610 to R62F) 2 words (WR61 to WR 62)			128 points (R550 to R62F) 8 words (WR55 to WR62)
	Data registers	Non-hold type	1652 words (DT0 to DT1651)			6112 words (DT0 to DT6111)
		Hold type	8 words (DT1652 to DT1659)			32 words (DT6112 to DT6143)

☞ **Note**

The program, system registers and the hold type areas (internal relay, data register and counter) are backed up by the built in EEPROM.

2.2 Specifications

Item			Relay output type		Transistor output type	
			C10RS/C10CRS C10RM/C10CRM	C14RS/C14CRS C14RM/C14CRM	C16T/C16CT C16P/C16CP	C32T/C32CT C32P/C32CP
Special functions	**Pulse catch input**		Total 6 points (X0 and X1: 50μs X2 to X5: 100μs)			
	Interrupt input					
	RS232C port (* Note 1)		Available unit: FP0-C10CRS, C10CRM, C14CRS, C14CRM, C16CT, C16CP, C32CT and C32CP Baud rate: 300, 600, 1200, 2400. 4800, 9600, and 19200 bps Transmission distance: 3m/9.84 ft. Terminal block: 3-pin, made by Phoenix Contact Co. (product number: MKDS 1/3-3.5) Communication method: half-duplex			
	Periodical interrupt		0.5 ms to 30 s interval			
	Constant scan		Available			
	High-speed counter function (* Note 2, 3)		Counter mode: Addition/subtraction (one phase) - Input point number: 4 channels maximum - Maximum counting speed: 10 kHz maximum for all 4 channels (* Note 4) - Input contacts used: X0: count input (ch 0), X1: count input (ch 1), X2: reset input (* Note 5); X3: count input (ch 2), X4: count input (ch 3), X5: reset input (* Note 5) - Minimum input pulse width: X0, X1.. 50 μs <10 kHz> X3, X4 ..100 μs <5 kHz>			
			Counter mode: Two-phase/individual/direction decision (two phase) - Input point number: 2 channels maximum - Maximum counting speed: 2 kHz maximum for all 2 channels - Input contacts used: X0: count input (ch 0), X1: count input (ch 0), X2: reset input; X3: count input (ch 2), X4: count input (ch 2), X5: reset input - Minimum input pulse width: X0, X1.. 50 μs <10 kHz> X3, X4 ..100 μs <5 kHz>			
	Pulse output function (* Note 3)	**Output point number**	————		Two independent points (Y0 and Y1) (No interpolation function)	
		Output frequency	————		40 Hz to 10 kHz (Y0/Y1: one-point output) 40 Hz to 5 kHz (Y0/Y1: two-point output)	

☞ **next page**

Item			Relay output type		Transistor output type	
			C10RS/C10CRS C10RM/C10CRM	C14RS/C14CRS C14RM/C14CRM	C16T/C16CT C16P/C16CP	C32T/C32CT C32P/C32CP
Special functions	PWM output function (* Note 3)	Output point number	————		Two points (Y0 and Y1)	
		Output frequency	————		Frequency: 0.15 Hz to 38 Hz (* Note 6) Duty: 0.1% to 99.9%	

☞ Notes

- **(*1): When using the RS232C port for communication, retransmission is recommended.**
  The driver IC for the RS232C port conforms completely to EIA/TIA-232E and CCITT V. 28 standards.
- **(*2): The combinations 1 phase × 2 channels and 2 phases × 1 channel are also possible for the high-speed counter.**
- **(*3): For details and limitations on the high-speed counter, pulse output, and PWM output functions, see the * FP0 Programming Manual.**
- **(*4): The max. counting speed (10 kHz) is the counting speed with a rated input voltage of 24 VDC and an ambient temperature of 25 °C/77 °F. The counting speed (frequency) will decrease depending on the voltage and temperature.**
- **(*5): If the unit is equipped with both reset inputs X0 and X1, X2 serves as the reset input for X1. If X3 and X4 are used, X5 serves as the reset input for X4.**
- **(*6): With control unit's CPU that is Ver. 2.0 or a subsequent version, the frequency will be 0.15 Hz to 1 kHz.**

2.2.3 Input Specifications

Item		Description
Insulation method		optical coupler
Rated input voltage		24 V DC
Rated input current		approx. 4.3 mA (at 24 V DC)
Input impedance		approx. 5.6 kΩ
Operating voltage range		21.6 to 26.4 V DC
Input points per common (*Note 1)	**C10RM, C10CRM, C10RS, C10CRS**	6 points/common
	C14RM, C14CRM, C14RS, C14CRS	8 points/common
	C16T, C16CT, C16P, C16CP	8 points/common
	C32T, C32CT, C32P, C32CP	16 points/common
ON voltage/ON current		19.2 V or less/3 mA or less
OFF voltage/OFF current		2.4 V or more/1 mA or more
Response time (at 24 V DC and 25 °C/66 °F)	**OFF ↔ ON**	50 μs or less (at X0, X1) (* Note 2) 100 μs or less (at X2 to X5) (* Note 2) 2 ms or less (at X6 to XF)
	ON ↔ OFF	the same as above
Operating mode indicator		LED

☞ Notes

- **(*1): Either positive or negative polarity is possible for the input voltage supply.**
- **(*2): X0 through X5 are inputs for the high-speed counter and have a fast response time. If used as normal inputs, we recommend inserting a timer in the ladder program as chattering and noise may be interpreted as an input signal.**

2.2.3.1 Limitations on Number of Simultaneous Input ON Points

Keep the number of input points per common which are simultaneously ON within the following range as determined by the temperature.

FP0-C14RM/C14CRM/C14RS/C14CRS

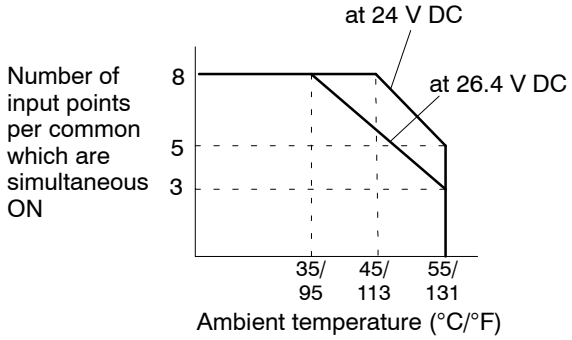

FP0-C16T/C16CT/C16P/C16CP

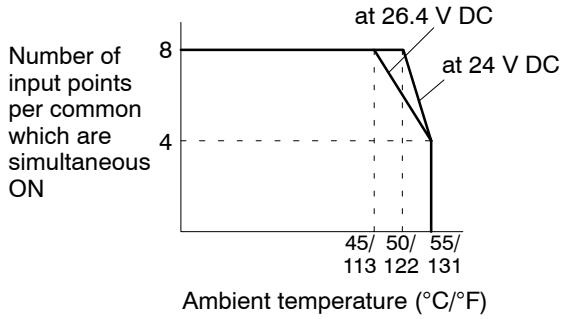

FP0-C32T/C32CT/C32P/C32CP

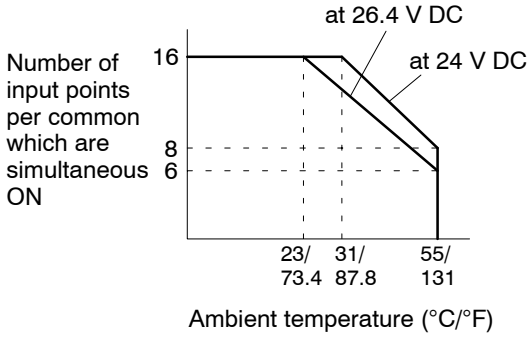

2.2.4 Output Specifications

2.2.4.1 Relay Output Type

FP0 relay output types: C10RM, C10CRM, C10RS, C10CRS, C14RM, C14CRM, C14RS, C14CRS

Item		Description
Output type		Normally open (1 Form A) relay output
Rated control capacity		2 A 250 V AC, 2 A 30 V DC (4.5 A maximum per common)
Output points per common	**C10RM, C10CRM, C10RS, C10CRS**	2 points/common + 1 point/common +1 point/common
	C14RM, C14CRM, C14RS, C14CRS	4 points/common + 1 point/common + 1 point/common
Response time	**OFF → ON**	approx. 10 ms
	ON → OFF	approx. 8 ms
Mechanical life time		20,000,000 operations or more
Electrical life time		100,000 operations or more
Surge absorber		None
Operating mode indicator		LED

2.2.4.2 Transistor Output Type

FP0 transistor output types: C16T, C16CT, C16P, C16CP, C32T, C32CT, C32P, C32CP

Item		Description
Insulation method		optical coupler
Output type		open collector
Rated load voltage		NPN open collector type: 5 to 24 V DC (* Note) PNP open collector type: 24 V DC
Operating load voltage range		NPN open collector type: 4.75 to 26.4 V DC PNP open collector type: 21.6 to 26.4 V DC
Max. load current		0.1 A
Max. surge current		0.3 A
Output points per common	**C16T, C16CT, C16P, C16CP**	8 points/common
	C32T, C32CT, C32P, C32CP	16 points/common
OFF state leakage current		100 μA or less
ON state voltage drop		1.5 V or less
External power supply for driving internal circuit	**Voltage**	21.6 to 26.4 V DC
	Current	Y0 and Y1: 5 mA/1 point, except Y0 and Y1: 3 mA/1 point
Response time	**OFF → ON**	1 ms or less (Y0 and Y1 only: 50 μs or less)
	ON → OFF	1 ms or less (Y0 and Y1 only: 50 μs or less)
Surge absorber		Zener diode
Operating mode indicator		LED

☞ **Note**

For NPN open collector type, able to be used with different voltages for the load voltage and the external power supply for driving the internal circuit.

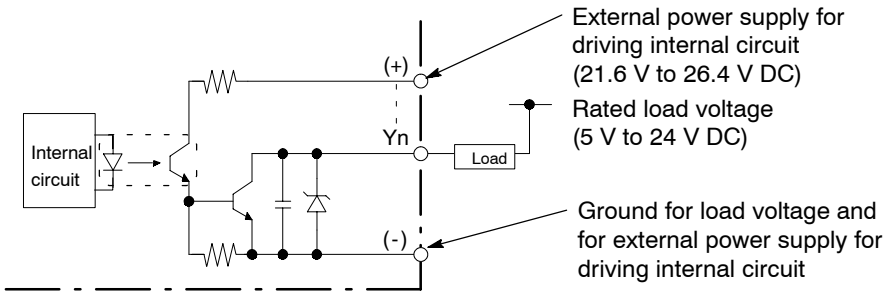

2.3 Internal Circuit Diagram

2.3.1 Relay Output Type (C10RS/C10CRS/C10RM/C10CRM/C14RS/C14CRS/C14RM/C14CRM)

FP0-C10RS/C10CRS/C10RM/C10CRM/C14RS/C14CRS/C14RM/C14CRM

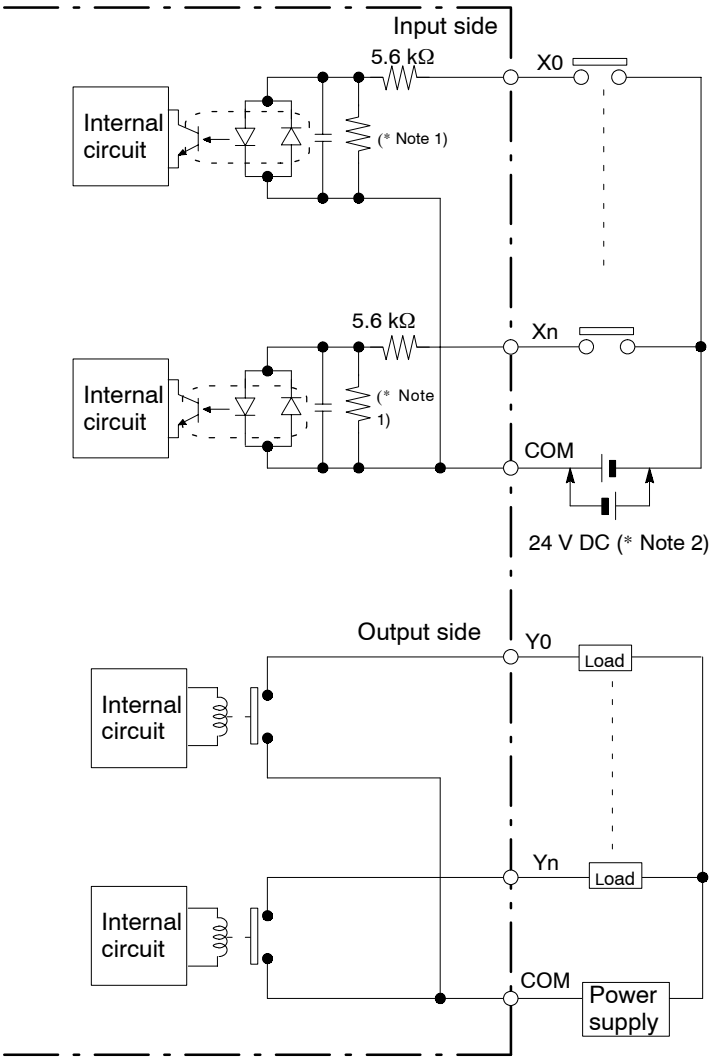

☞ **Notes**

- **(*1): The resistor in the control unit is 2 k• for X0 through X5, and 1 k• for X6 and X7.**
- **(*2): Either positive or negative polarity is possible for the input voltage supply.**

2.3.2 Transistor Output Type

2.3.2.1 NPN Open Collector Type (C16T/C16CT/C32T/C32CT)

When the load voltage and external power supply are the same
This example is when the values of the rated load voltage and external power supply for driving internal circuit are the same. In this situation, there is only one power supply.

FP0-C16T/C16CT/C32T/C32CT

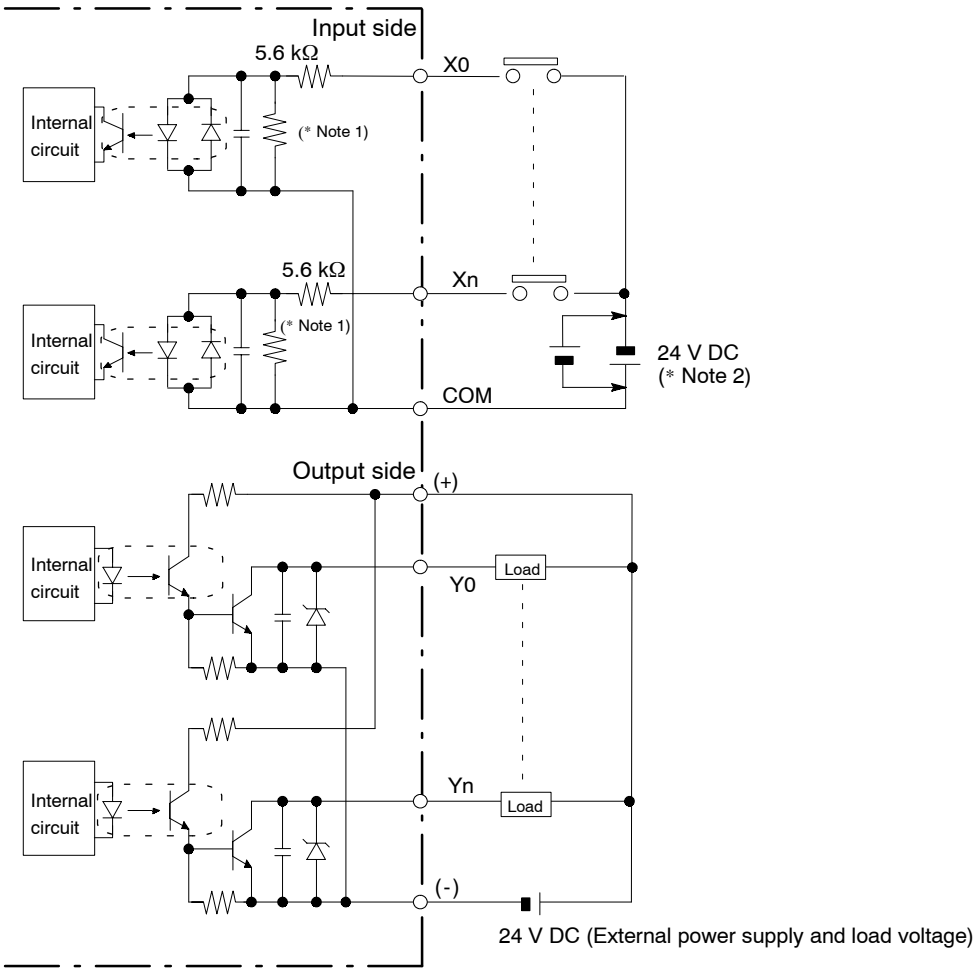

☞ **Notes**

- **(*1): The resistor in the control unit is 2 k• for X0 through X5, and 1 k• for X6 through XF.**
- **(*2): Either positive or negative polarity is possible for the input voltage supply.**

When the load voltage differs from the 24 V DC external power supply for the driving the internal circuit

Other than 24 V DC load voltage, 5 V DC and 12 V DC and other load voltages can be connected.

FP0-C16T/C16CT/C32T/C32CT

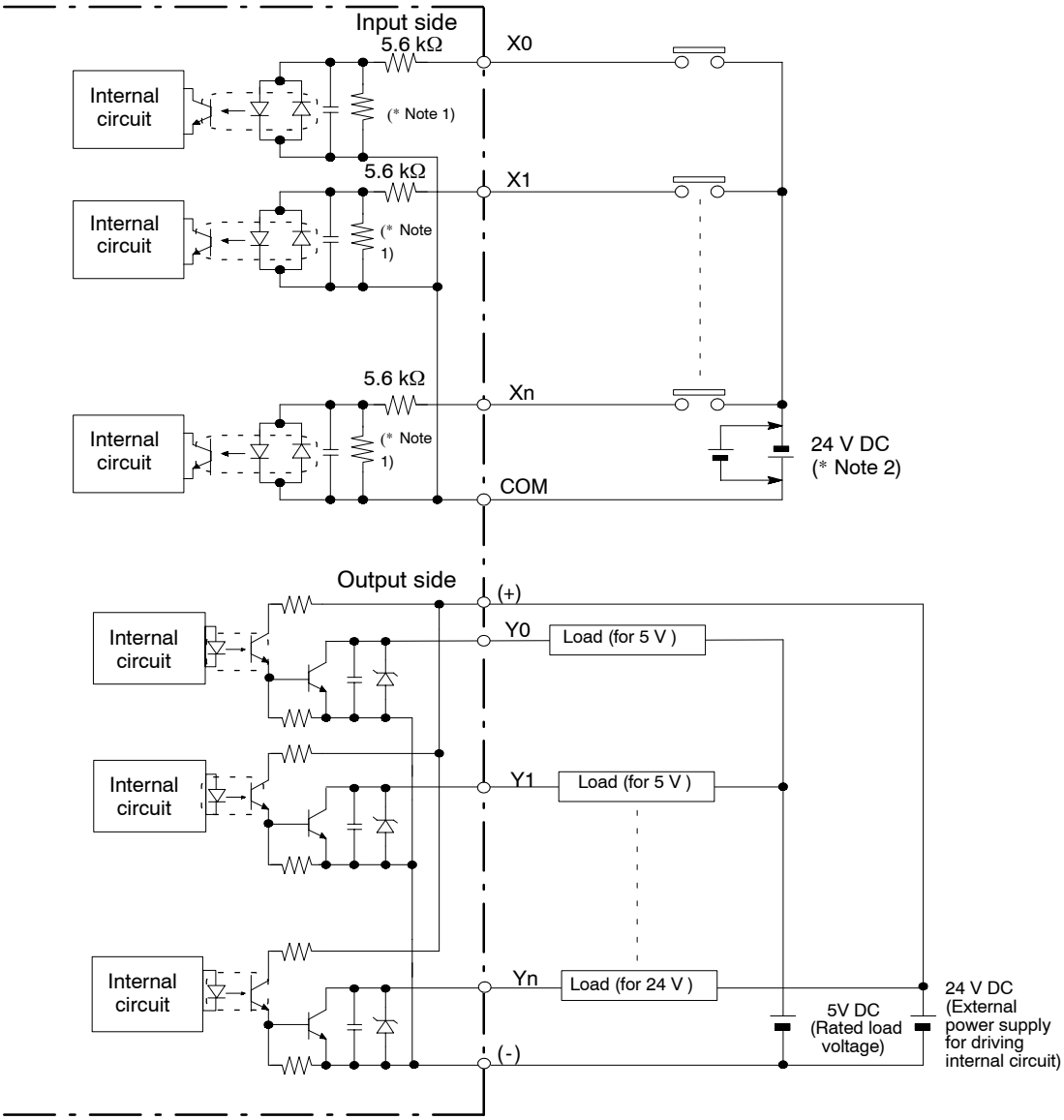

☞ Notes

- **(*1): The resistor in the control unit is 2 k• for X0 through X5, and 1 k• for X6 through XF.**
- **(*2): Either positive or negative polarity is possible for the input voltage supply.**

2.3.2.2 PNP Open Collector Type (C16P/C16CP/C32P/C32CP)

FP0-C16P/C16CP/C32P/C32CP

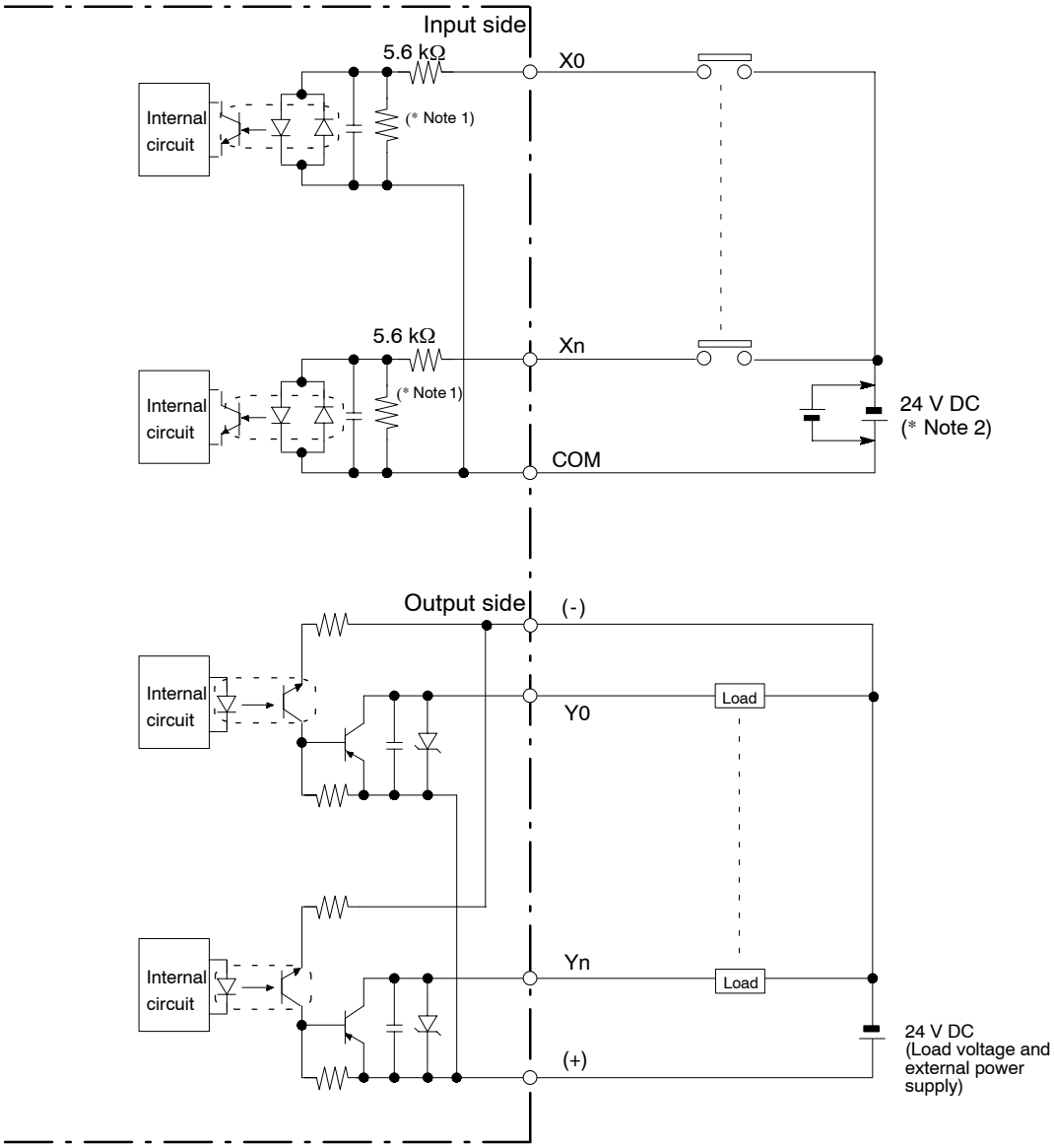

☞ **Notes**

- **(*1): The resistor in the control unit is 2 k• for X0 through X5, and 1 k• for X6 through XF.**
- **(*2): Either positive or negative polarity is possible for the input voltage supply.**

2.4 Pin Layouts

2.4.1 C10RS/C10CRS/C10RM/C10CRM

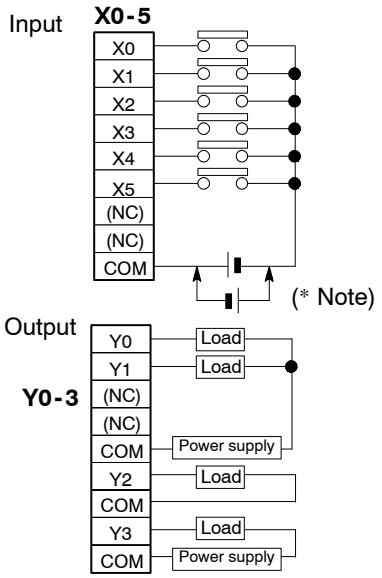

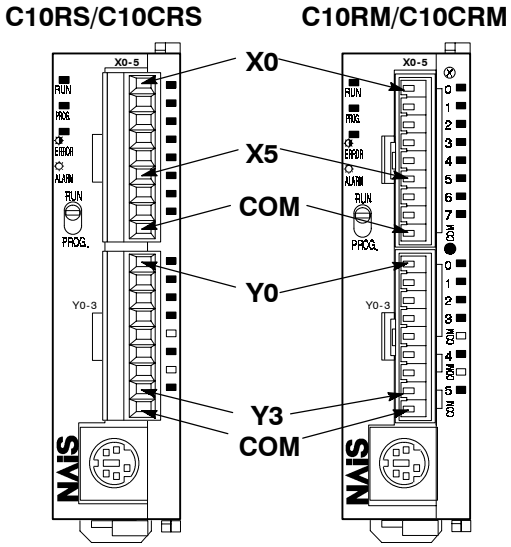

2.4.2 C14RS/C14CRS/C14RM/C14CRM

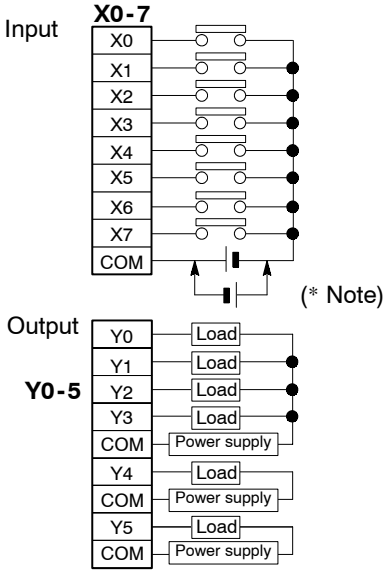

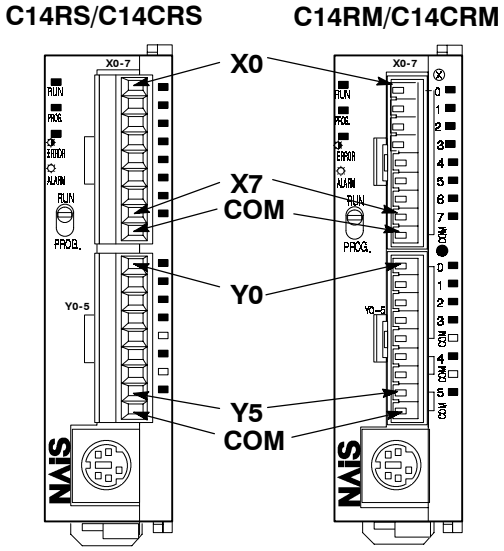

☞ **Note**

Either positive or negative polarity is possible for the input voltage supply.

2.4.3 C16T/C16CT

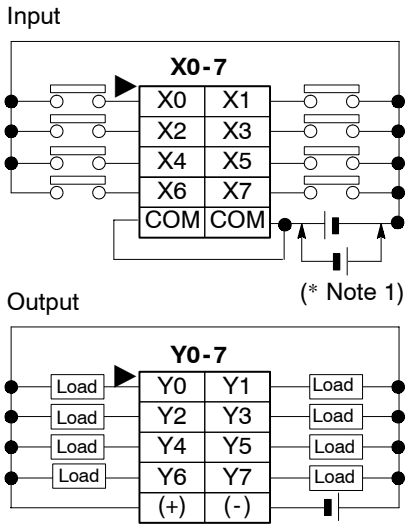

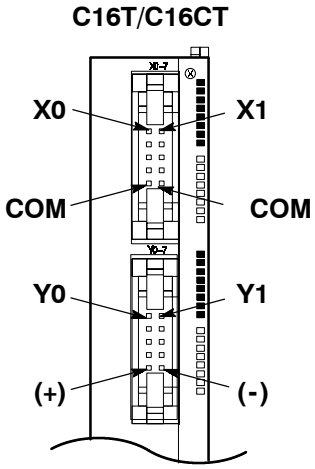

☞ Notes

- **The two COM terminals of input terminal (X0-7) are connected internally, however they should be externally connected as well.**
- **(*1): Either positive or negative polarity is possible for the input voltage supply.**

2.4.4 C16P/C16CP

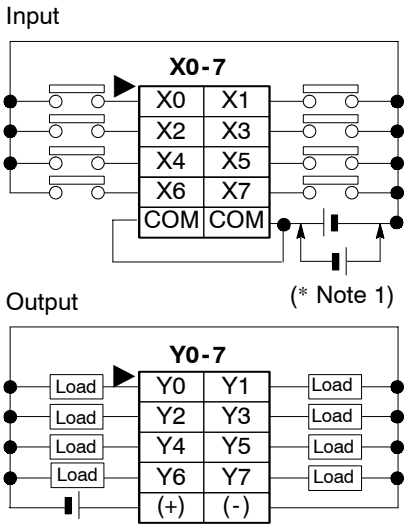

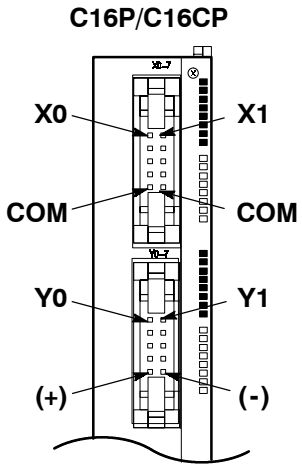

☞ Notes

- **The two COM terminals of input terminal (X0-7) are connected internally, however they should be externally connected as well.**
- **(*1): Either positive or negative polarity is possible for the input voltage supply.**

2.4.5 C32T/C32CT

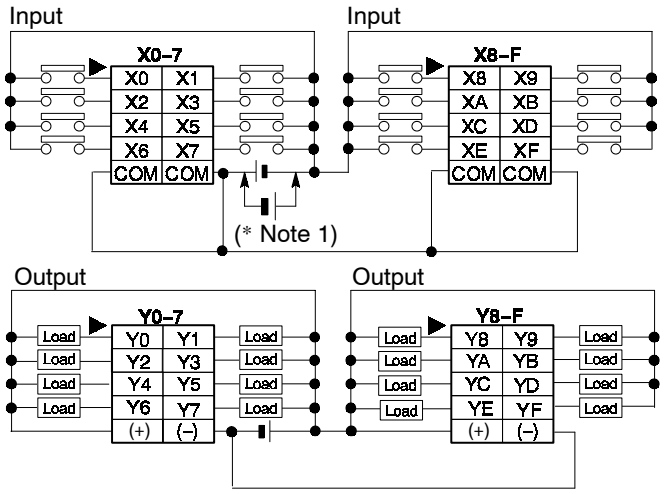

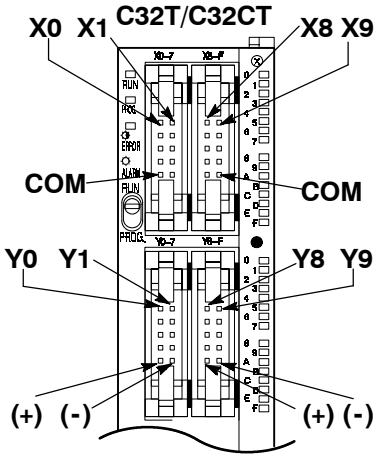

☞ Notes

- **The four COM terminals of input terminals (X0-7 and X8-F) are connected internally, however they should be externally connected as well.**
- **The (+) terminals of output terminals (Y0-7) and output terminals (Y8-F) are connected internally, however they should be externally connected as well.**
- **The (-) terminals of output terminals (Y0-7) and output terminals (Y8-F) are connected internally, however they should be externally connected as well.**
- **(*1): Either positive or negative polarity is possible for the input voltage supply.**

2.4.6 C32P/C32CP

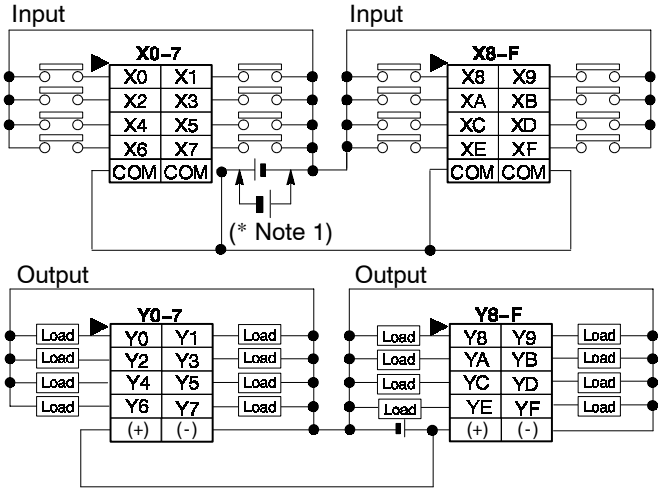

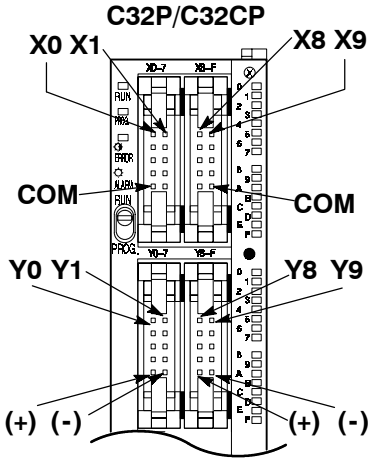

☞ Notes

- **The four COM terminals of input terminals (X0-7 and X8-F) are connected internally, however they should be externally connected as well.**
- **The (+) terminals of output terminals (Y0-7) and output terminals (Y8-F) are connected internally, however they should be externally connected as well.**
- **The (-) terminals of output terminals (Y0-7) and output terminals (Y8-F) are connected internally, however they should be externally connected as well.**
- **(*1): Either positive or negative polarity is possible for the input voltage supply.**

Chapter 3

Expansion I/O Units

3.1 Parts and Terminology . . . . . 3 - 3

3.1.1 Expansion I/O Unit Types . . . . . 3 - 4

3.2 Specifications . . . . . 3 - 6

3.2.1 General Specifications . . . . . 3 - 6

3.2.2 Input Specifications . . . . . 3 - 6

3.2.2.1 Limitations on Number of Simultaneous Input ON Points . . . . . 3 - 7

3.2.3 Output Specifications . . . . . 3 - 8

3.2.3.1 Relay Output Type . . . . . 3 - 8

3.2.3.2 Transistor Output Type . . . . 3 - 9

3.3 Internal Circuit Diagram . . . . . 3 - 10

3.3.1 Relay Output Type (E8RS/E8RM/E16RS/E16RM) . . . . 3 - 10

3.3.2 Transistor Output Type . . . . . 3 - 11

3.3.2.1 NPN Open Collector Type (E16T/E32T) . . . . . 3 - 11

3.3.2.2 PNP Open Collector Type (E16P/E32P) . . . . . 3 - 13

3.3.3 Expansion Input Units (E8X/E16X) . 3 - 14

3.3.4 Expansion Output Units . . . . . 3 - 15

3.3.4.1 NPN Open Collector Type (E8YT/E16YT) . . . . . 3 - 15

3.3.4.2 PNP Open Collector Type (E8YP/E16YP) . . . . . 3 - 17

☞ **next page**

3.4 Pin Layouts . . . . . 3 - 18
3.4.1 E8RS/E8RM . . . . . 3 - 18
3.4.2 E16RS/E16RM . . . . . 3 - 19
3.4.3 E16T . . . . . 3 - 20
3.4.4 E16P . . . . . 3 - 21
3.4.5 E32T . . . . . 3 - 22
3.4.6 E32P . . . . . 3 - 23
3.4.7 E8X . . . . . 3 - 24
3.4.8 E16X . . . . . 3 - 25
3.4.9 E8YT . . . . . 3 - 26
3.4.10 E8YP . . . . . 3 - 26
3.4.11 E16YT . . . . . 3 - 27
3.4.12 E16YP . . . . . 3 - 28

3.1 Parts and Terminology

There are fourteen different expansion I/O unit types available:

1. E8RS terminal type
2. E16RS terminal type
3. E8RM connector type
4. E16RM connector type
5. E16T
6. E16P
7. E32T
8. E32P
9. E8X input type
10. E16X input type
11. E8YT output type
12. E8YP output type
13. E16YT output type
14. E16YP output type

In the next sections you will find a detailed description of each expansion I/O unit.

3.1 Parts and Terminology

3.1.1 Expansion I/O Unit Types

E8RS/E16RS (terminal type)

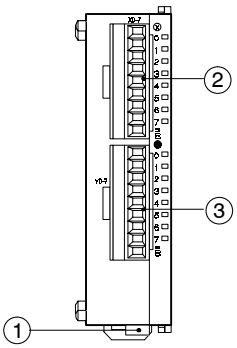

E8RM/E16RM (connector type)

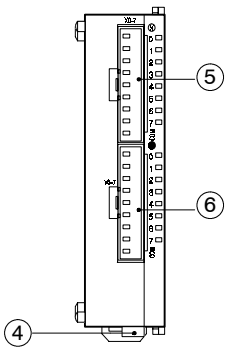

E16T/E16P

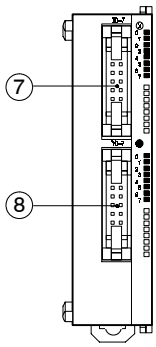

E32T/E32P

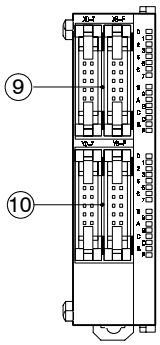

E8X

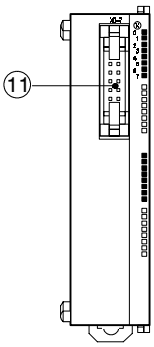

E16X

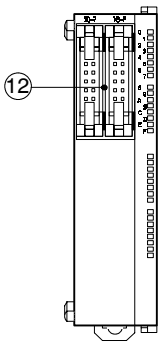

E8YT/E8YP

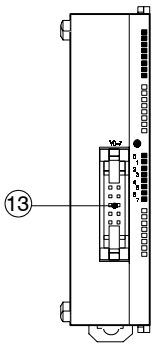

E16YT/E16YP

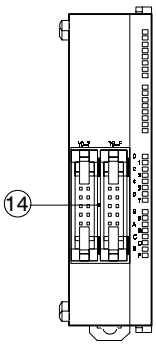

All expansion I/O unit types

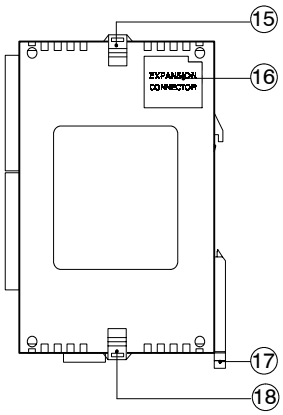

① ④ Power supply connector

Supply 24 V DC. It is connected using the power supply cable (AFP0581) that comes with the unit.

② Input terminal (9-pin)

③ Output terminal (9-pin)

The input and output terminals (② and ③) use a terminal block socket made by Phoenix Contact Co. (product number: 1840434) (*section 7.6).

⑤ Input connector (9-pin)

⑥ Output connector (9-pin)

The input and output connectors (⑤ and ⑥) use a connector made by Molex Japan Co. (product number: 51067-0900) (*section 7.7).

⑦ ⑪ Input connector (10-pin)

⑧ ⑬ Output connector (10-pin)

⑨ ⑫ Input connector (10-pin × 2)

⑩ ⑭ Output connector (10-pin × 2)

Use a MIL type connector for the input and output connectors (⑦ to ⑭) (*section 7.8).

⑮ ⑱ Expansion hook

is used to secure expansion units.

⑯ Expansion connector

connects an expansion unit to the internal circuit of the expansion I/O unit (*section 6.1).

⑰ DIN rail attachment lever

allows simple attachment to a DIN rail.

The lever is also used for installation on FP0 slim type mounting plate (AFP0803).

3.2 Specifications

3.2.1 General Specifications

For more details on the general specifications, refer to section 2.2.1.

3.2.2 Input Specifications

Item		Description
Insulation method		optical coupler
Rated input voltage		24 V DC
Rated input current		approx. 4.3 mA (at 24 V DC)
Input impedance		approx. 5.6 kΩ
Operating voltage range		21.6 to 26.4 V DC
Input points per common (* Note)	**E8RS, E8RM**	4 points/common
	E16RS, E16RM, E16T, E16P, E8X	8 points/common
	E32T, E32P, E16X	16 points/common
ON voltage/ON current		19.2 V or less/3 mA or less
OFF voltage/OFF current		2.4 V or more/1 mA or more
Response time (at 24 V DC and 25 °C/66 °F)	**OFF ↔ ON**	2 ms or less
	ON ↔ OFF	the same as above
Operating mode indicator		LED

☞ **Note**

Either positive or negative polarity is possible for the input voltage supply.

3.2.2.1 Limitations on Number of Simultaneous Input ON Points

Keep the number of input points per common which are simultaneously ON within the following range as determined by the temperature.

FP0-E16RS/E16RM

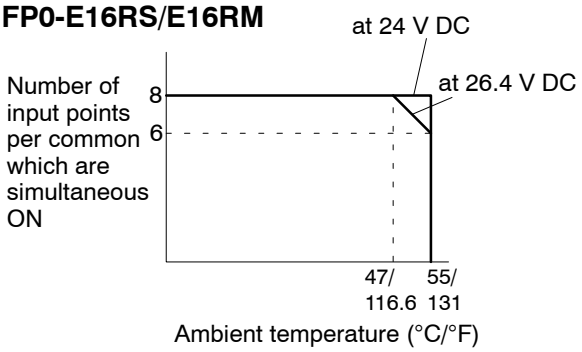

FP0-E16T/E16P/E8X

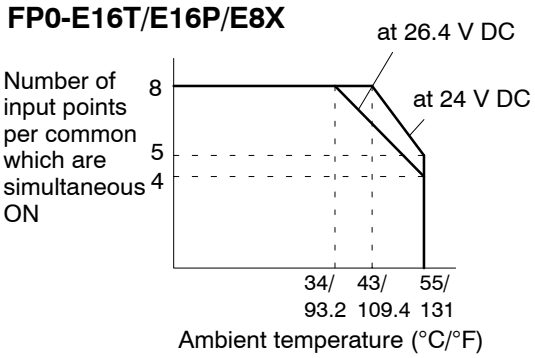

FP0-E32T/E32P/E16X

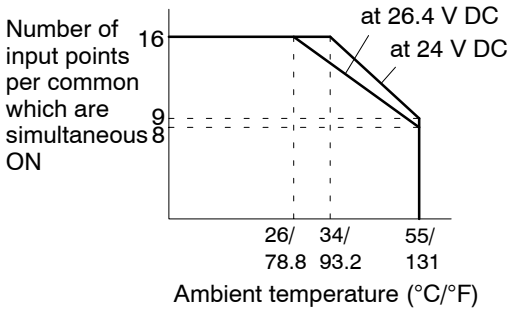

3.2.3 Output Specifications

3.2.3.1 Relay Output Type

FP0 relay output types: E8RS, E8RM, E16RS, and E16RM

Item		Description
Output type		Normally open (1 Form A) relay output
Rated control capacity		2 A 250 V AC, 2 A 30 V DC (4.5 A maximum per common)
Output points per common	**E8RS, E8RM**	4 points/common
	E16RS, E16RM	8 points/common
Response time	**OFF ↔ ON**	approx. 10 ms
	ON ↔ OFF	approx. 8 ms
Mechanical life time		20,000,000 operations or more
Electrical life time		100,000 operations or more
Surge absorber		None
Operating mode indicator		LED

3.2.3.2 Transistor Output Type

FP0 transistor output types: E16T, E16P, E32T, E32P, E8YT, E8YP, E16YT, E16YP

Item		Description
Insulation method		optical coupler
Output type		open collector
Rated load voltage		NPN open collector type: 5 to 24 V DC (* Note) PNP open collector type: 24 V DC
Operating load voltage range		NPN open collector type: 4.75 to 26.4 V DC PNP open collector type: 21.6 to 26.4 V DC
Max. load current		0.1 A
Max. surge current		0.3 A
Output points per common	**E16T, E16P, E8YT, E8YP**	8 points/common
	E32T, E32P, E16YT, E16YP	16 points/common
OFF state leakage current		100 μA or less
ON state voltage drop		1.5 V or less
External power supply for driving internal circuit	**Voltage**	21.6 to 26.4 V DC
	Current	Y0 and Y1: 5 mA/1 point, except Y0 and Y1: 3 mA/1 point
Response time	**OFF → ON**	1 ms or less (Y0 and Y1 only: 50 μs or less)
	ON → OFF	1 ms or less (Y0 and Y1 only: 50 μs or less)
Surge absorber		Zener diode
Operating mode indicator		LED

☞ **Note**

For NPN open collector type, able to be used with different voltages for the load voltage and the external power supply for driving the internal circuit.

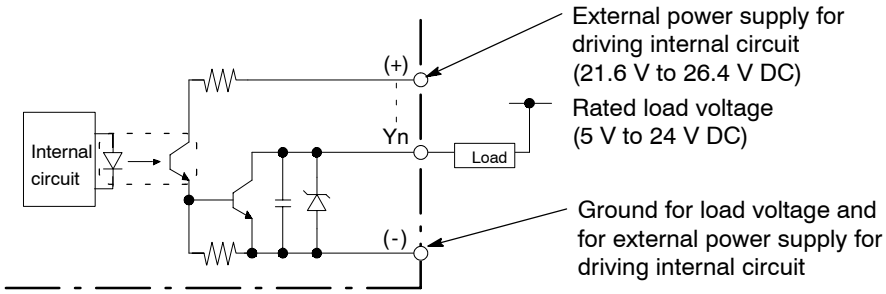

3.3 Internal Circuit Diagram

3.3.1 Relay Output Type (E8RS/E8RM/E16RS/E16RM)

FP0-E8RS/E8RM/E16RS/E16RM

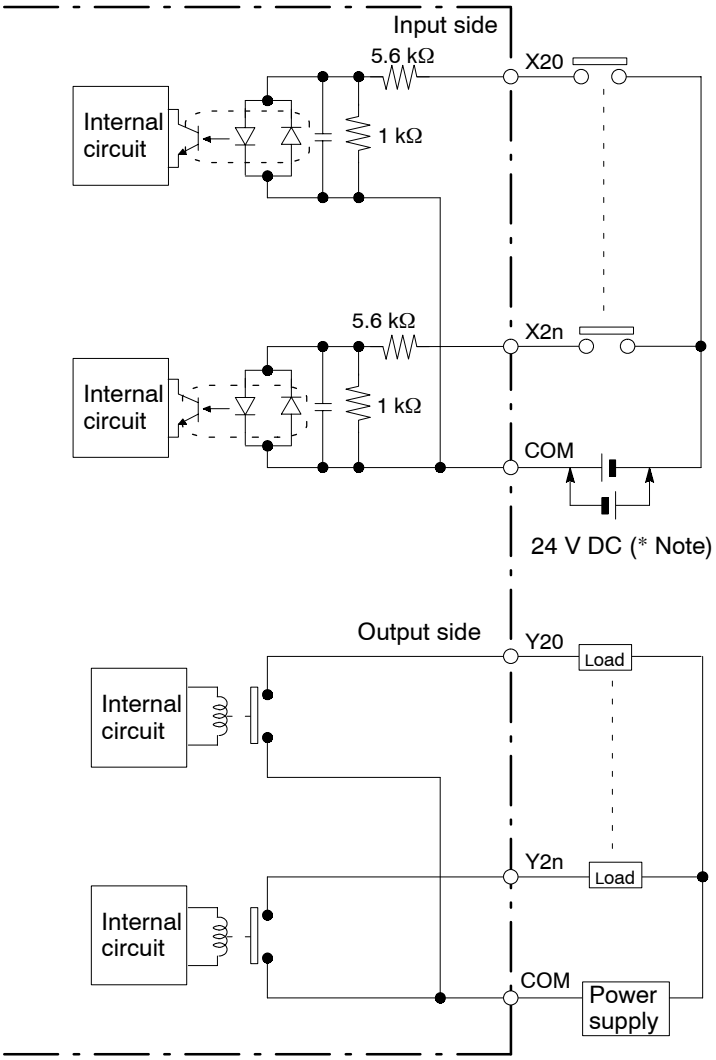

☞ Notes

- **Either positive or negative polarity is possible for the input voltage supply.**
- **The I/O number given above is the I/O number when the expansion I/O unit is installed as the first expansion unit (*section 5.3).**

3.3.2 Transistor Output Type

3.3.2.1 NPN Open Collector Type (E16T/E32T)

When the load voltage and external power supply are the same
This example is when the values of the rated load voltage and external power supply for driving internal circuit are the same. In this situation, there is only one power supply.

FP0-E16T/E32T

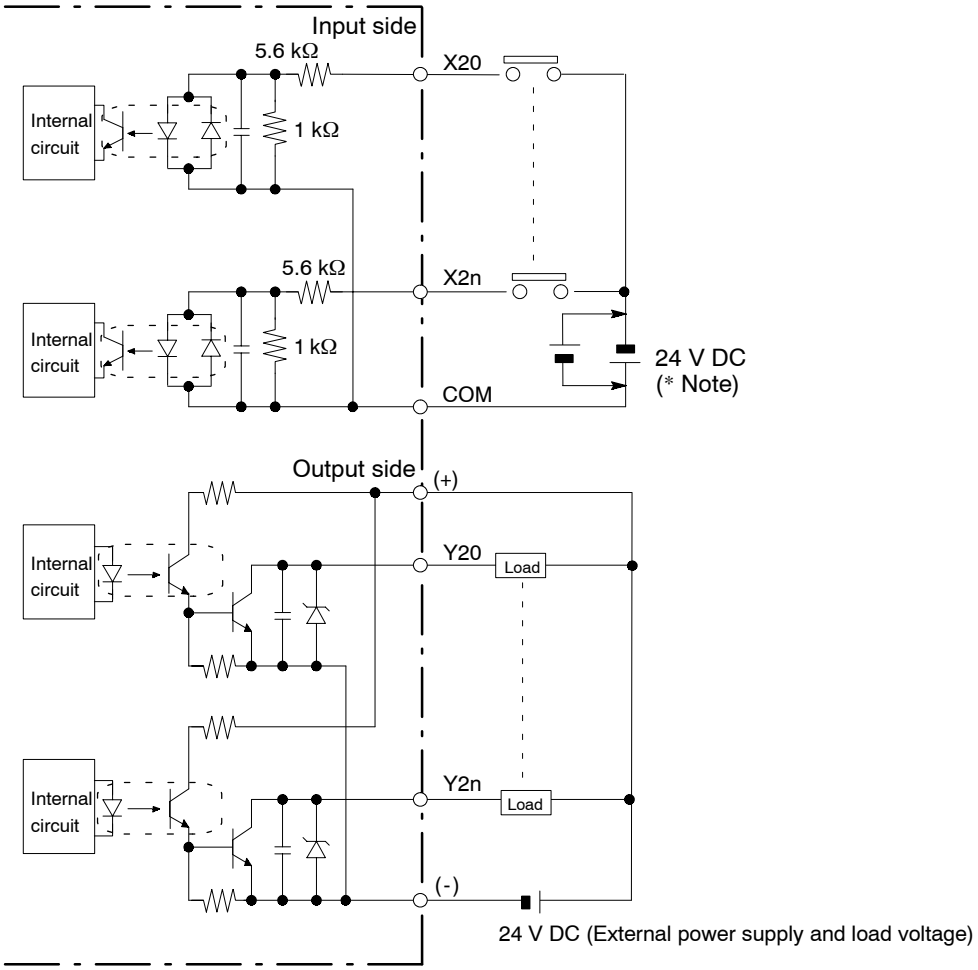

☞ **Notes**

- **Either positive or negative polarity is possible for the input voltage supply.**
- **The I/O number given above is the I/O number when the expansion I/O unit is installed as the first expansion unit (*section 5.3).**

When the load voltage differs from the 24 V DC external power supply for the driving the internal circuit

Other than 24 V DC load voltage, 5 V DC and 12 V DC and other load voltages can be connected.

FP0-E16T/E32T

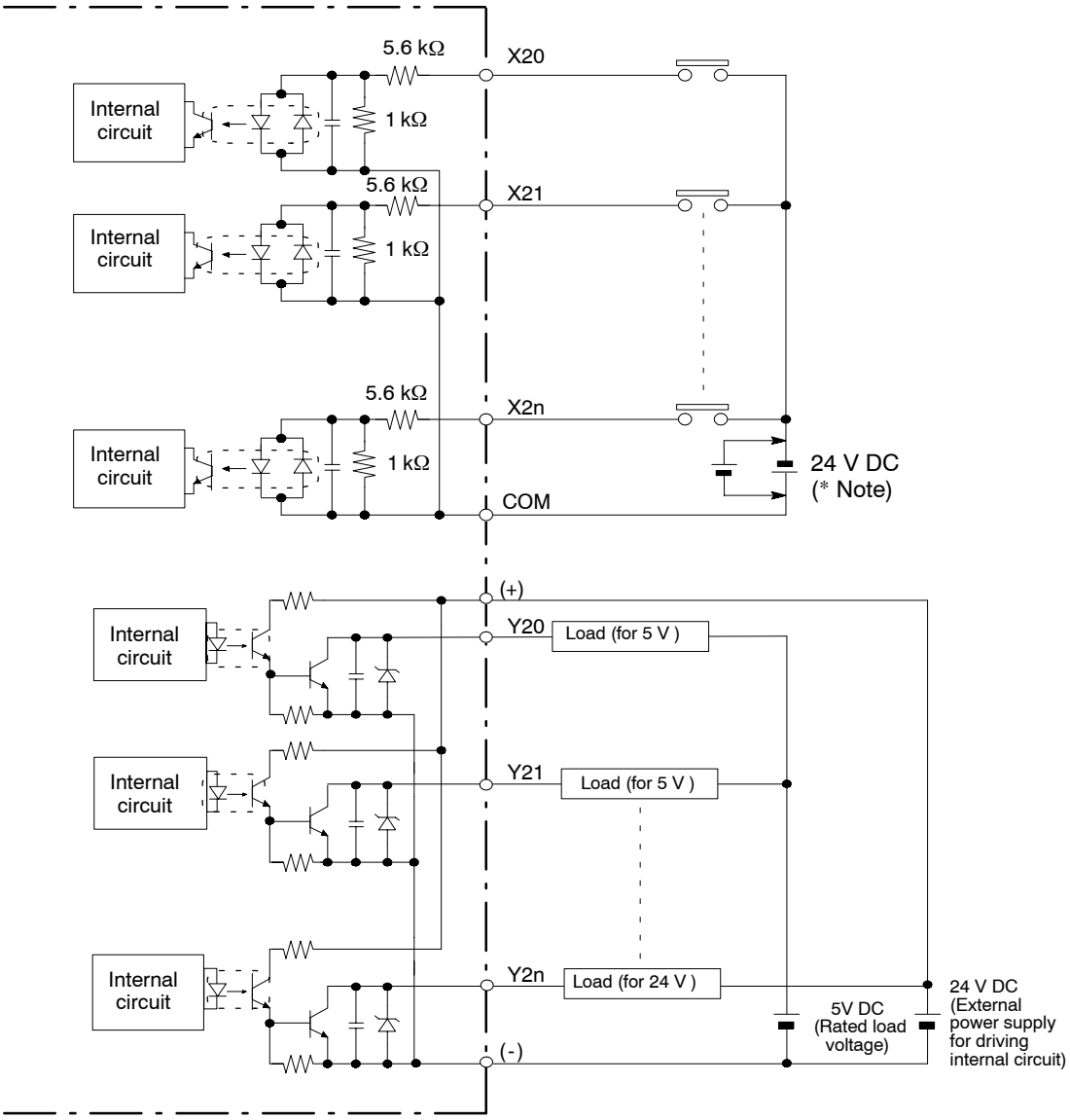

☞ **Notes**

- **Either positive or negative polarity is possible for the input voltage supply.**
- **The I/O number given above is the I/O number when the expansion I/O unit is installed as the first expansion unit (*section 5.3).**

3.3.2.2 PNP Open Collector Type (E16P/E32P)

FP0-E16P/E32P

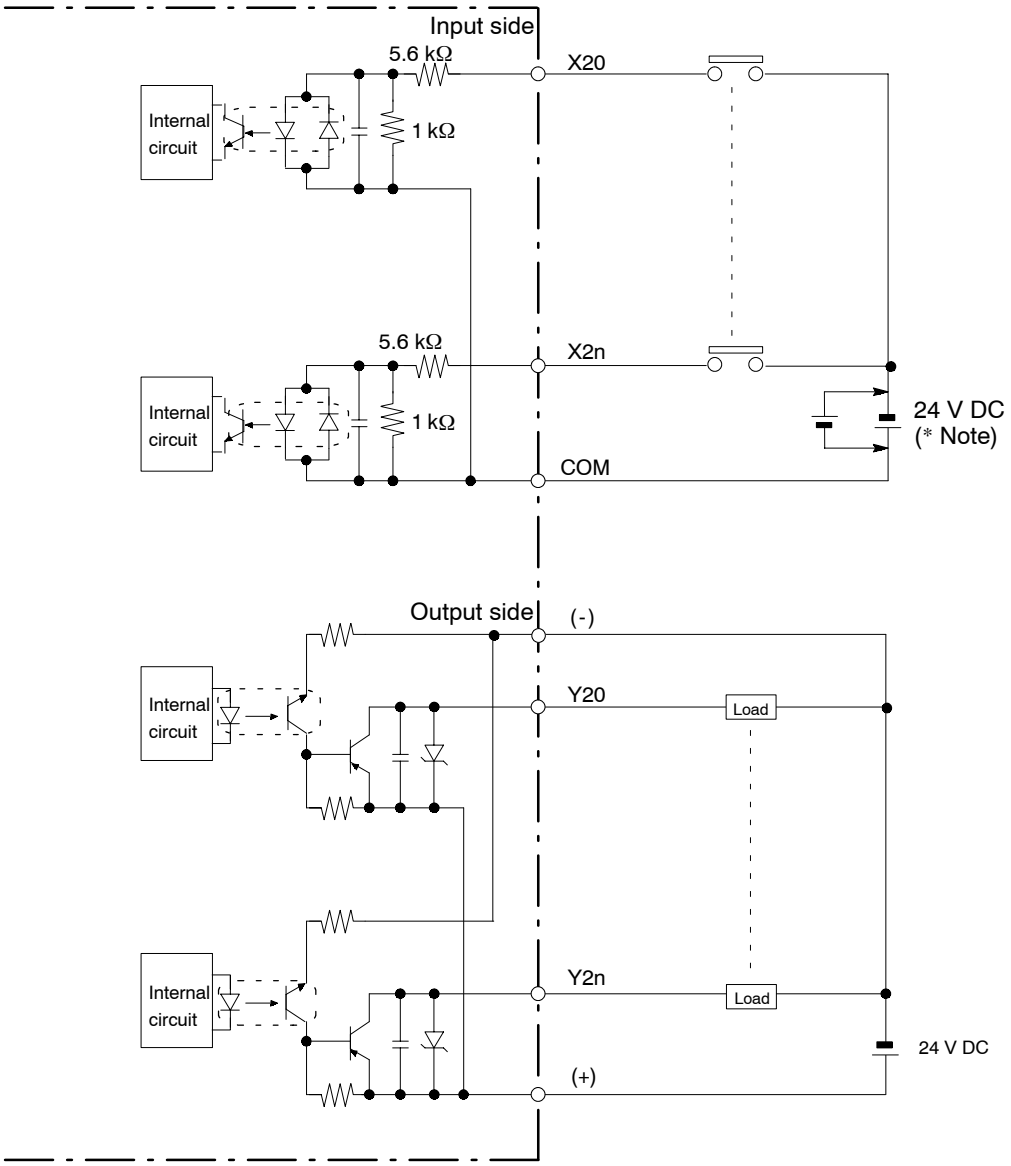

☞ **Notes**

- **Either positive or negative polarity is possible for the input voltage supply.**
- **The I/O number given above is the I/O number when the expansion I/O unit is installed as the first expansion unit (*section 5.3).**

3.3.3 Expansion Input Units (E8X/E16X)

FP0-E8X/E16X

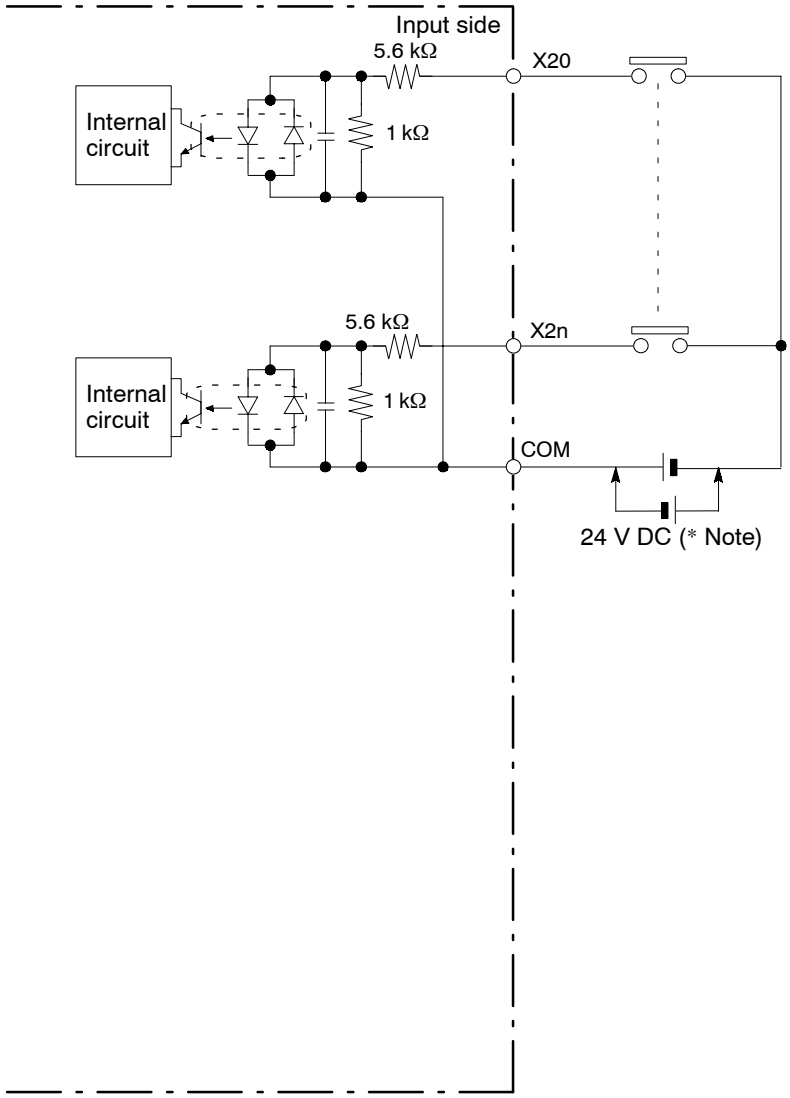

☞ Notes

- **Either positive or negative polarity is possible for the input voltage supply.**
- **The input number given above is the input number when the expansion input unit is installed as the first expansion unit (*section 5.3).**

3.3.4 Expansion Output Units

3.3.4.1 NPN Open Collector Type (E8YT/E16YT)

When the load voltage and external power supply are the same
This example is when the values of the rated load voltage and external power supply for driving the internal circuit are the same. In this situation, there is only one power supply.

FP0-E8YT/E16YT

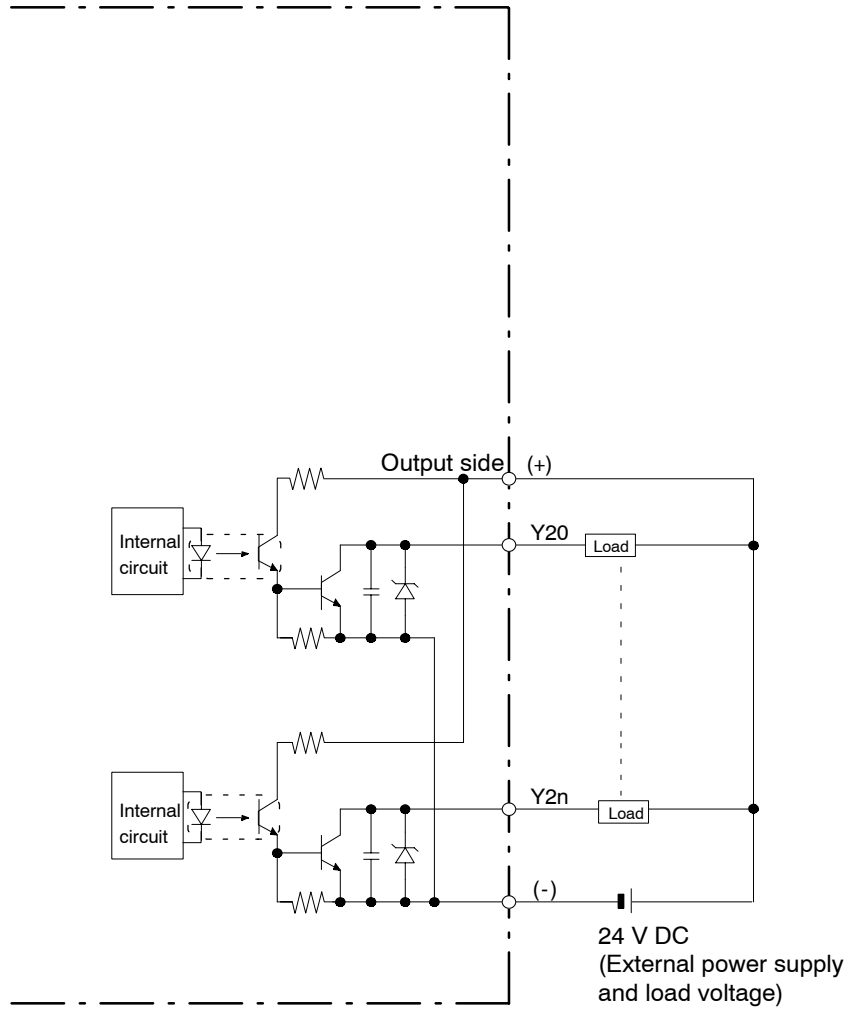

☞ **Note**

The output number given above is the output number when the expansion output unit is installed as the first expansion unit (*section 5.3).

When the load voltage differs from the 24 V DC external power supply for the driving the internal circuit

Other than 24 V DC load voltage, 5 V DC and 12 V DC and other load voltages can be connected.

FP0-E8YT/E16YT

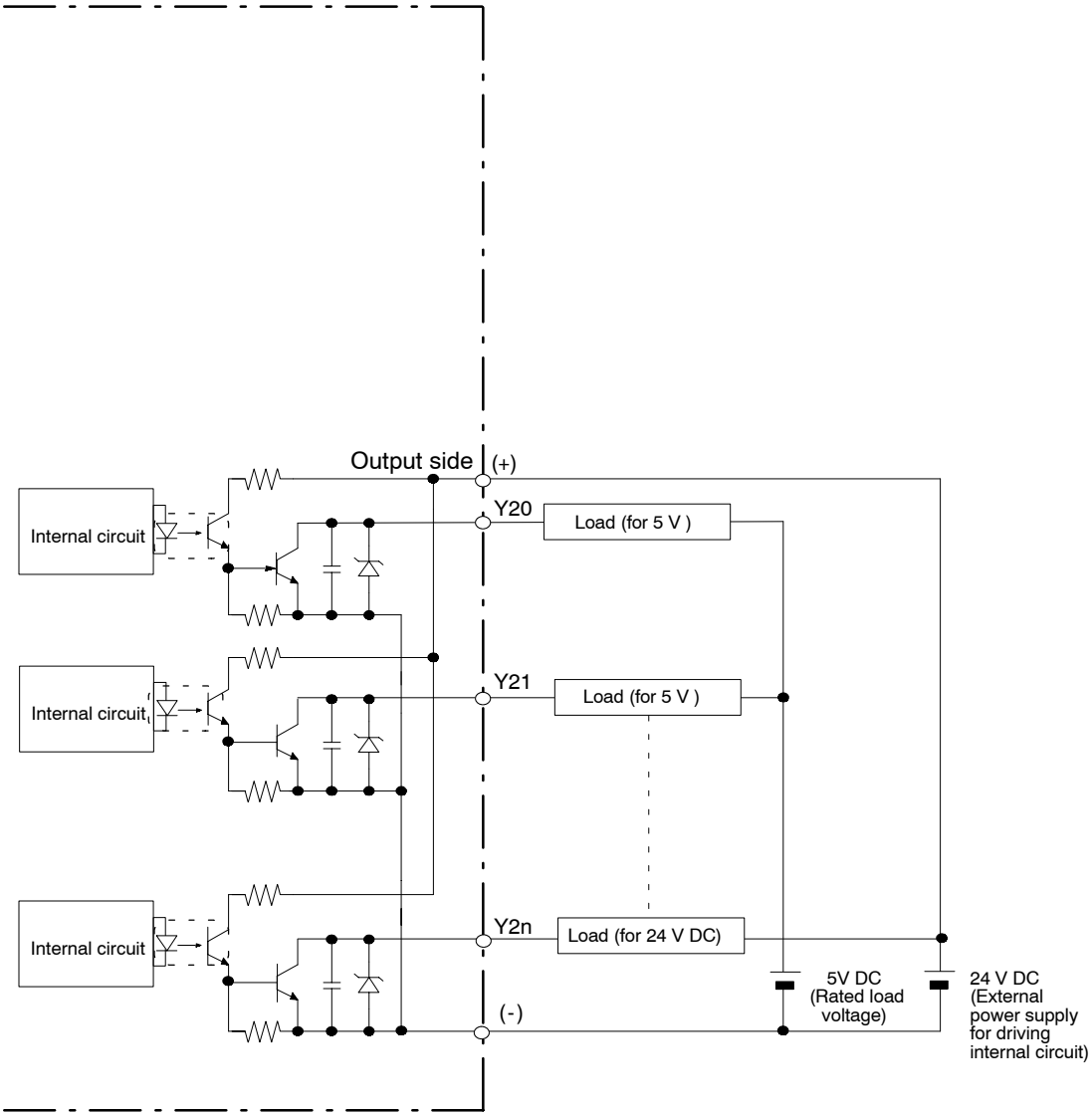

☞ **Note**

The output number given above is the output number when the expansion output unit is installed as the first expansion unit (*section 5.3).

3.3.4.2 PNP Open Collector Type (E8YP/E16YP)

FP0-E8YP/E16YP

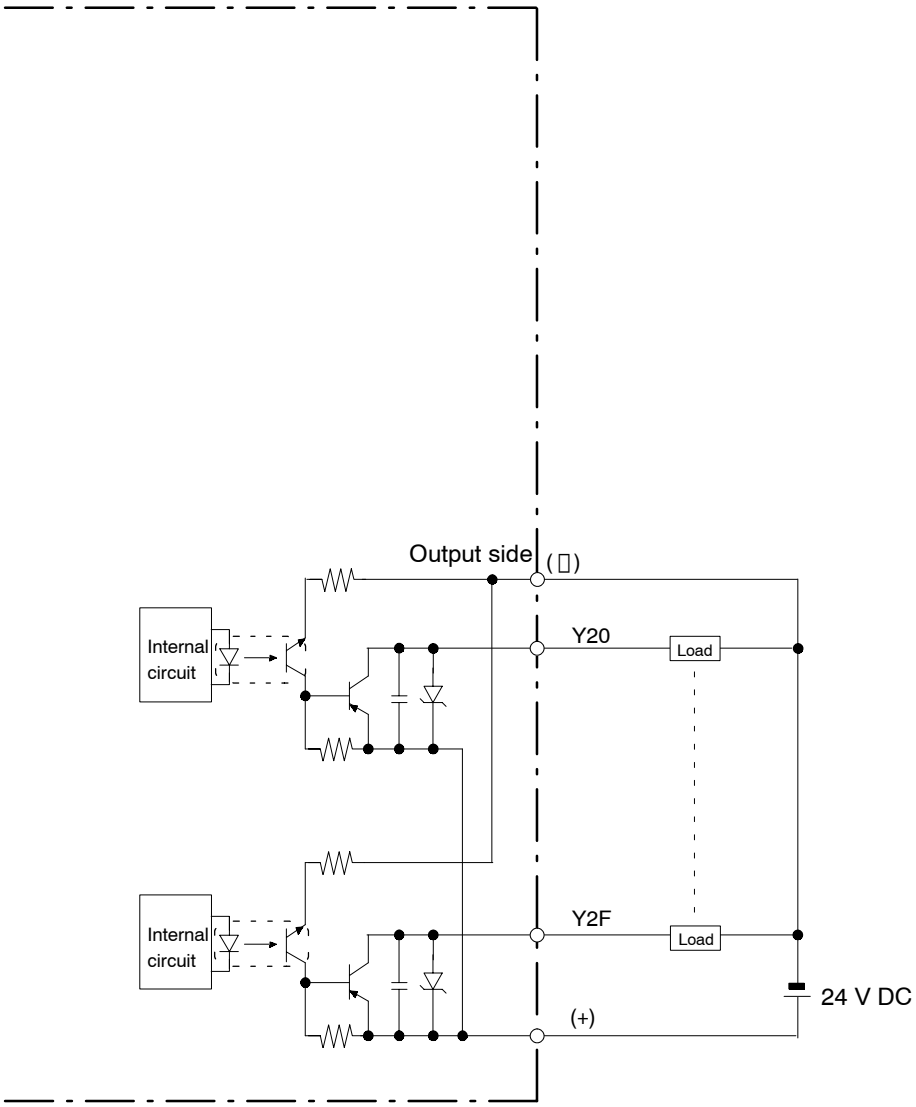

☞ **Note**

The output number given above is the output number when the expansion output unit is installed as the first expansion unit (*section 5.3).

3.4 Pin Layouts

3.4.1 E8RS/E8RM

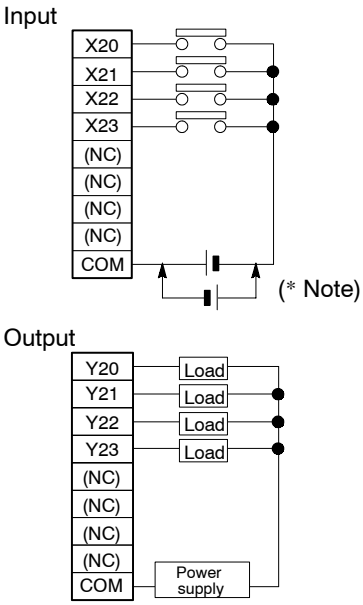

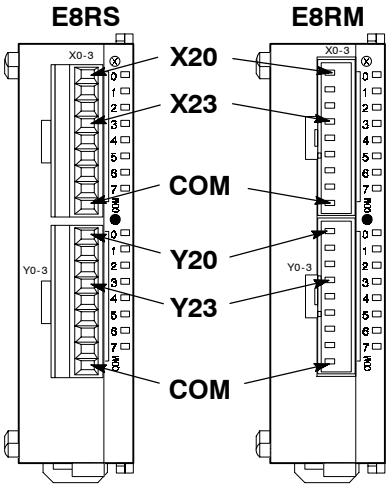

☞ Notes

- **Either positive or negative polarity is possible for the input voltage supply.**
- **The I/O number given above is the I/O number when the expansion I/O unit is installed as the first expansion unit. The I/O numbers for the expansion I/O units will differ depending on the location where they are installed (*section 5.3).**

3.4.2 E16RS/E16RM

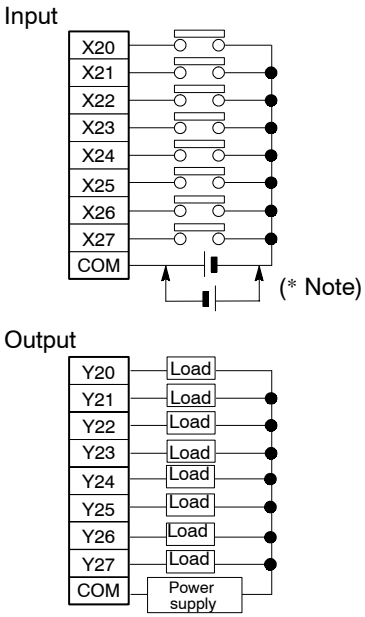

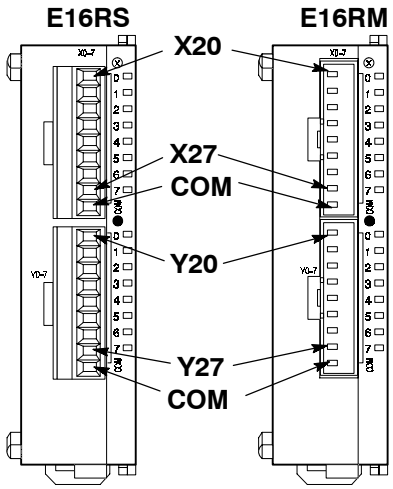

☞ Notes

- **Either positive or negative polarity is possible for the input voltage supply.**
- **The I/O number given above is the I/O number when the expansion I/O unit is installed as the first expansion unit. The I/O numbers for the expansion I/O units will differ depending on the location where they are installed (*section 5.3).**

3.4.3 E16T

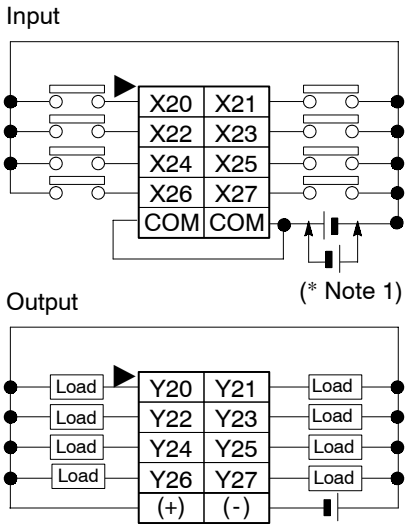

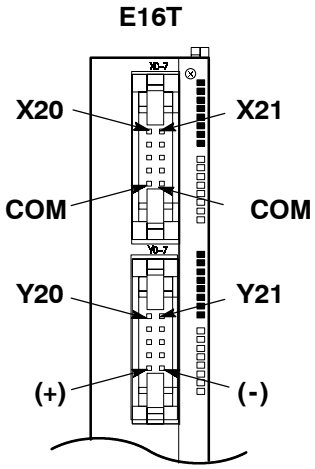

☞ Notes

- **The two COM terminals of input terminals are connected internally, however they should be externally connected as well.**
- **(*1): Either positive or negative polarity is possible for the input voltage supply.**
- **The I/O number given above is the I/O number when the expansion I/O unit is installed as the first expansion unit. The I/O numbers for the expansion I/O units will differ depending on the location where they are installed (*section 5.3).**

3.4.4 E16P

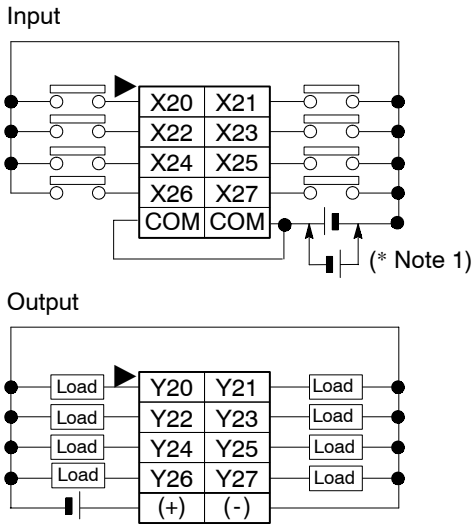

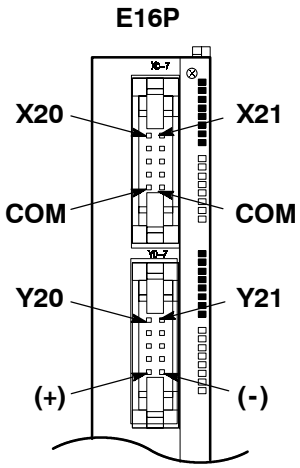

☞ Notes

- **The two COM terminals of input terminals are connected internally, however they should be externally connected as well.**
- **(*1): Either positive or negative polarity is possible for the input voltage supply.**
- **The I/O number given above is the I/O number when the expansion I/O unit is installed as the first expansion unit. The I/O numbers for the expansion I/O units will differ depending on the location where they are installed (*section 5.3).**

3.4.5 E32T

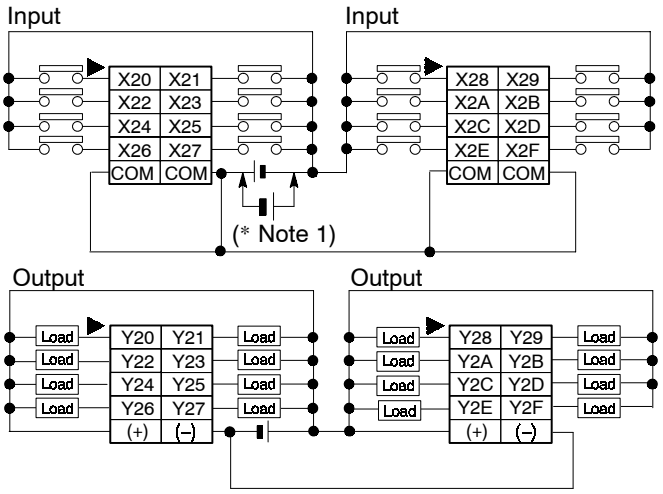

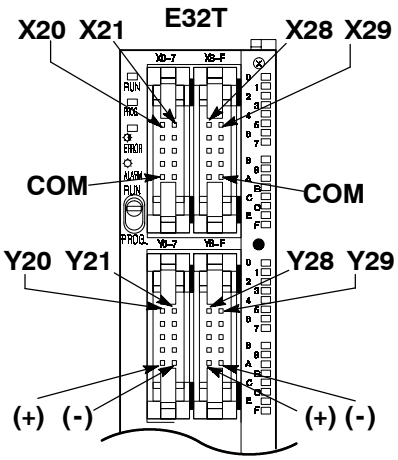

☞ Notes

- **The four COM terminals of input terminals are connected internally, however they should be externally connected as well.**
- **The two (+) terminals of output terminals are connected internally, however they should be externally connected as well.**
- **The two (-) terminals of the output terminals are connected internally, however they should be externally connected as well.**
- **(*1): Either positive or negative polarity is possible for the input voltage supply.**
- **The I/O number given above is the I/O number when the expansion I/O unit is installed as the first expansion unit. The I/O numbers for the expansion I/O units will differ depending on the location where they are installed (*section 5.3).**

3.4.6 E32P

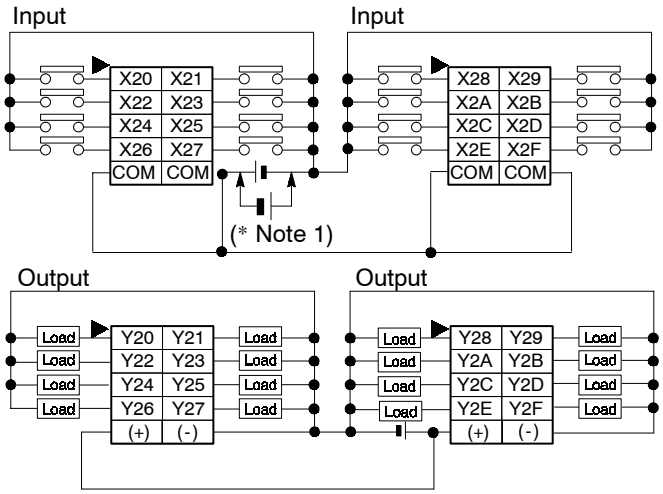

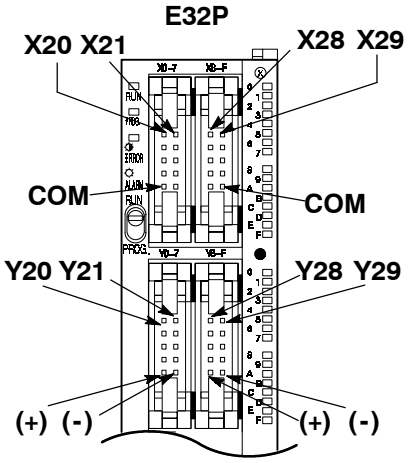

☞ Notes

- **The four COM terminals of input terminals are connected internally, however they should be externally connected as well.**
- **The two (+) terminals of output terminals are connected internally, however they should be externally connected as well.**
- **The two (-) terminals of the output terminals are internally connected, however they should be externally connected as well.**
- **(*1): Either positive or negative polarity is possible for the input voltage supply.**
- **The I/O number given above is the I/O number when the expansion I/O unit is installed as the first expansion unit. The I/O numbers for the expansion I/O units will differ depending on the location where they are installed (*section 5.3).**

3.4.7 E8X

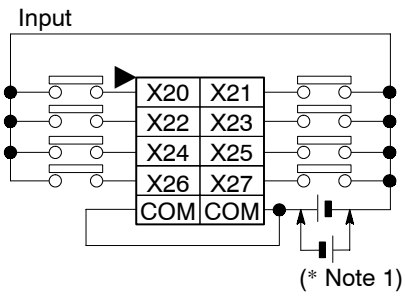

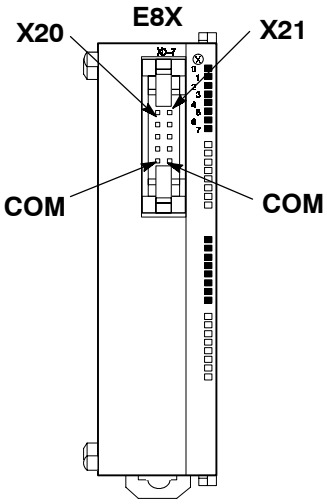

☞ Notes

- **The two COM terminals of input terminals are connected internally, however they should be externally connected as well.**
- **(*1): Either positive or negative polarity is possible for the input voltage supply.**
- **The input number given above is the input number when the expansion input unit is installed as the first expansion unit. The input numbers for the expansion input units will differ depending on the location where they are installed (*section 5.3).**

3.4.8 E16X

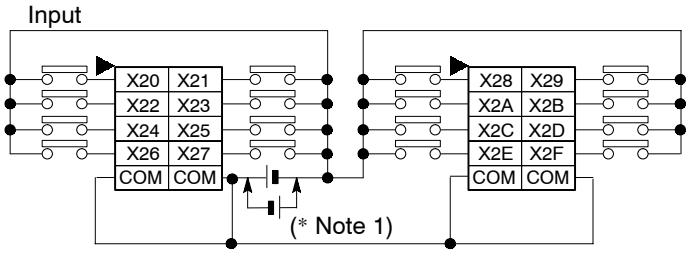

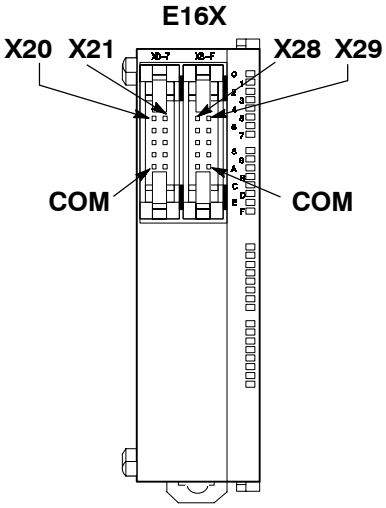

☞ Notes

- **The four COM terminals of input terminals are connected internally, however they should be externally connected as well.**
- **(*1): Either positive or negative polarity is possible for the input voltage supply.**
- **The input number given above is the input number when the expansion input unit is installed as the first expansion unit. The input numbers for the expansion input units will differ depending on the location where they are installed (*section 5.3).**

3.4.9 E8YT

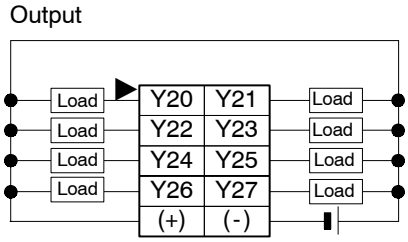

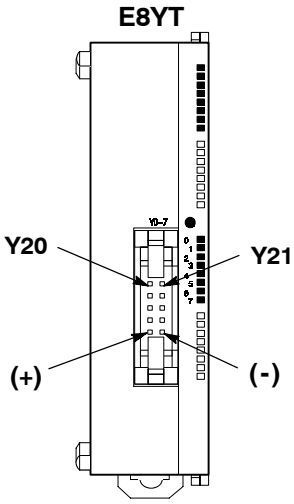

3.4.10 E8YP

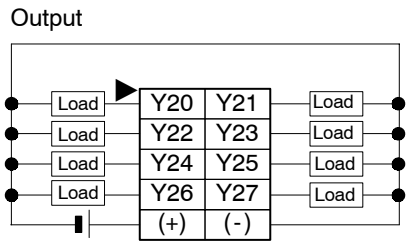

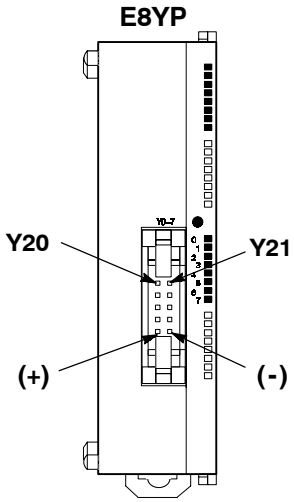

☞ Note

The output number given above is the output number when the expansion output unit is installed as the first expansion unit. The output numbers for the expansion output units will differ depending on the location where they are installed (*section 5.3).

3.4.11 E16YT

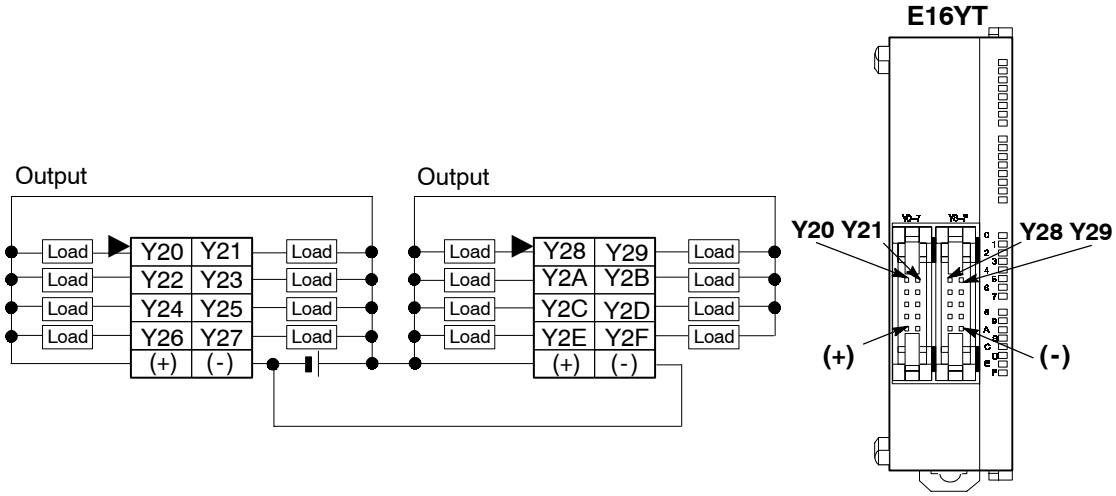

☞ Notes

- **The two (+) terminals of the output terminals are connected internally, however they should be externally connected as well.**
- **The two (-) terminals of the output terminals are connected internally, however they should be externally connected as well.**
- **The output number given above is the output number when the expansion output unit is installed as the first expansion unit. The output numbers for the expansion output units will differ depending on the location where they are installed (*section 5.3).**

3.4.12 E16YP

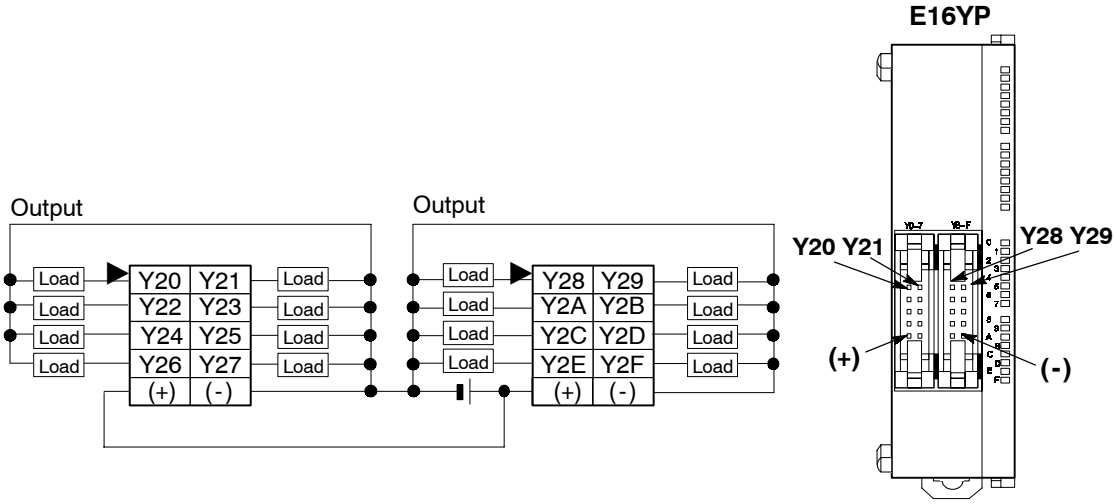

☞ Notes

- **The two (+) terminals of the output terminals are connected internally, however they should be externally connected as well.**
- **The two (-) terminals of the output terminals are connected internally, however they should be externally connected as well.**
- **The output number given above is the output number when the expansion output unit is installed as the first expansion unit. The output numbers for the expansion output units will differ depending on the location where they are installed (*section 5.3).**

Chapter 4

Analog I/O Unit

4.1 Parts and Terminology . . . . . 4 - 3

4.1.1 Analog Mode Switch Setting . . . . . 4 - 4

4.1.2 Analog I/O Terminal . . . . . 4 - 4

4.2 Specifications . . . . . 4 - 5

4.2.1 General Specifications . . . . . 4 - 5

4.2.1.1 Weight . . . . . 4 - 5

4.2.2 Analog Input Specifications . . . . . 4 - 6

4.2.3 Analog Output Specifications . . . . . 4 - 8

4.3 A/D Conversion Characteristics . . . . . 4 - 9

4.4 D/A Conversion Characteristics . . . . . 4 - 12

4.5 Wiring . . . . . 4 - 13

4.5.1 Analog Input Wiring . . . . . 4 - 13

4.5.2 Analog Output Wiring . . . . . 4 - 14

4.6 Boosting the Precision of the Thermocouple Range . . . . . 4 - 16

4.7 Averaging Function . . . . . 4 - 17

4.7.1 Averaging for Voltage Ranges and Current Ranges . . . . . 4 - 17

4.7.2 Averaging for a Thermocouple Range . . . . . 4 - 18

4.1 Parts and Terminology

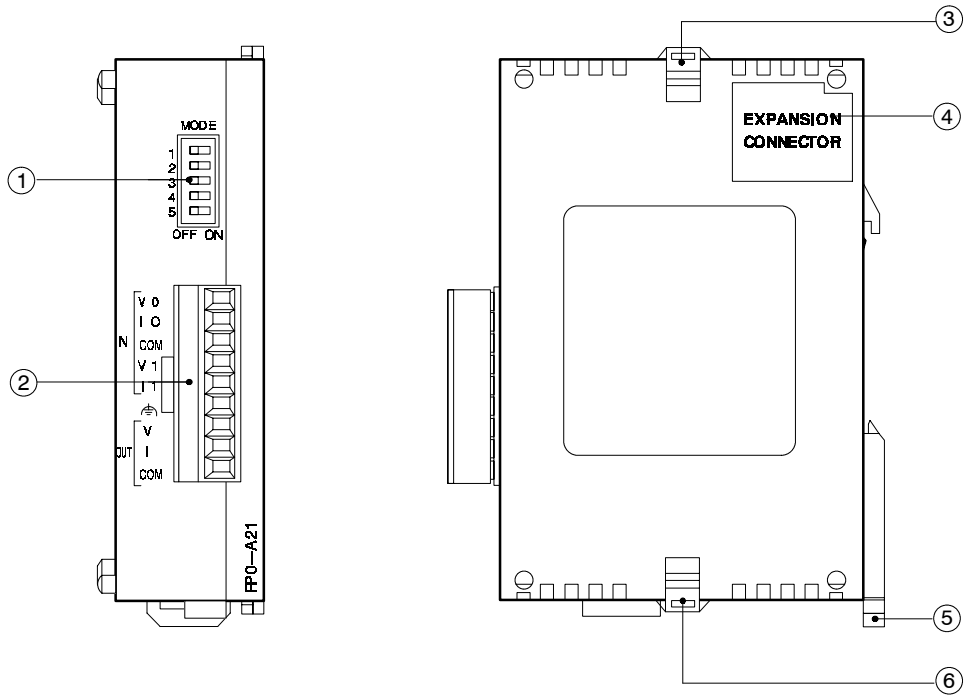

① Analog mode switch

is used to switch between input and output modes (voltage/current). With the analog I/O unit, both input channels are operated in the same range (*section 4.1.1.).

② Analog I/O terminal (9-pin)

Use a terminal block socket made by Phoenix Contact Co. (product number: 1840434) (*section 4.1.2 and 7.6).

③ ⑥ Expansion hook

is used to secure expansion units.

④ Expansion connector

connects an expansion unit to the internal circuit of the analog I/O unit (*section 6.1).

⑤ DIN rail attachment lever

allows simple attachment to a DIN rail. The lever is also used for installation on FP0 slim type mounting plate (AFP0803).

4.1.1 Analog Mode Switch Setting

Analog mode switch

Mode	Switch number	Range									
Analog input range switching	1 to 3, 5	0 to 5V 0 to 20mA		-10 to +10V		K type thermocouple (* Note 3)		J type thermocouple (* Note 3)		T type thermocouple (* Note 3)	
		No averaging (* Note 1)	With averaging (* Note 2)	No averaging (* Note 1)	With averaging (* Note 2)	Temperature of terminal to 1000 °C	-100 °C to temperature of terminal	Temperature of terminal to 750 °C	-100 °C to temperature of terminal	Temperature of terminal to 350 °C	-100 °C to temperature of terminal
Analog output range switching	4	0 to 20mA	-10 to +10V								

☞ Notes

- **(*1): No averaging: Conversion data is set for the specified input contact point area for each A/D conversion, on each channel.**
- **(*2): With averaging: On each channel, for each A/D conversion, the maximum and minimum values from the data of the last ten times are excluded, and the data from the other eight times is averaged, and the result set. (* section 4.7.1)**
- **(*3): If a thermocouple setting is used, averaging is carried out, regardless of the switch settings. (* section 4.7.2)**

4.1.2 Analog I/O Terminal

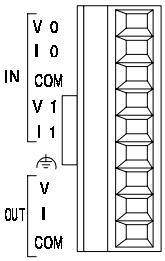

Pin number	Name	Description
1	IN/V 0	Analog input (channel 0), voltage input
2	IN/I 0	Analog input (channel 0), current input
3	IN/COM	Analog input (channel 0 and 1), analog input common
4	IN/V 1	Analog input (channel 1), voltage input
5	IN/I 1	Analog input (channel 1), current input
6	⏚	Ground for analog cable
7	OUT/V	Voltage output
8	OUT/I	Current output
9	OUT/COM	Analog output common

4.2 Specifications

4.2.1 General Specifications

Item	Description
Rated operation voltage	24 V DC
Operating voltage range	21.6 to 26.4 V DC
Rated current consumption	100 mA or less (*section 2.2.1.2)
Allowed momentary power off time	10 ms
Ambient temperature	0 °C to +55 °C/32 °F to +131 °F
Storage temperature	-20 °C to +70 °C/-4 °F to +158 °F
Ambient humidity	30% to 85% RH (non-condensing)
Storage humidity	30% to 85% RH (non-condensing)
Breakdown voltage	500 V AC for 1 minute between I/O terminal and power supply/ground terminal 500 V AC for 1 minute between input and output terminals
Insulation resistance	min. 100 MΩ (measured with a 500 V DC megger) for between I/O terminal and power supply/ground terminal min. 100 MΩ (measured with a 500 V DC megger) for between input and output terminals
Vibration resistance	10 Hz to 55 Hz, 1 cycle/min: double amplitude of 0.75 mm/ 0.030 in., 10 min on 3 axes
Shock resistance	Shock of 98 m/s^2 or more, 4 times on axes
Noise immunity	1,000 Vp-p with pulse widths 50 ns and 1μs (based on in-house measurements)
Operating condition	Free from corrosive gases and excessive dust

4.2.1.1 Weight

Type	Weight
A21	approx. 100 g/3.53 oz

4.2.2 Analog Input Specifications

Item			Description
Number of input points			2 channels/unit
Input range	**Voltage range**		0 to 5 V/-10 to +10 V
	Current range		0 to 20 mA
	Thermocouple range		K, J and T type thermocouples
Digital output	**0 to 5 V/ 0 to 20 mA**		K0 to K4000 (H0 to H0FA0)
	-10 to +10 V		K - 2000 to K + 2000 (HF830 to H07D0)
	Thermo-couple (units in °C)	**K type**	K (temperature of terminal) to K1000 (* Note 1) K - 100 to K (temperature of terminal) (* Note 2)
		J type	K (temperature of terminal) to K750 (* Note 1) K - 100 to K (temperature of terminal) (* Note 2)
		T type	K (temperature of terminal) to K350 (* Note 1) K - 100 to K (temperature of terminal) (* Note 2)
			When disconnected: K 20000
Resolution			1/4000
Conversion speed	**Voltage/ current range Voltage/ current range**		1 ms/channel (*Note 3)
	Thermocouple range		560 ms (fixed)
Overall precision	**Voltage/ current range Voltage/ current range**		±1% F.S. or less (0 to 55 °C/32 to 131 ° F) ±0.6% F.S. or less (25 °C/77 ° F)
	Thermocouple range		Offset error (0 to 55 °C/32 to 131 F°): ±2 % F.S. or less (K type thermocouple) (* Note 4) ±2.7 % F.S. or less (J type thermocouple) (* Note 4) ±5.8 % F.S. or less (T type thermocouple) (* Note 4) Linearity error: ±1 % F.S. or less(0 to 55 °C/32 to 131 ° F)
Input impedance	**Voltage range**		1 MΩ or more
	Current range		250Ω
Absolute maximum input	**Voltage range**		±15 V
	Current range		+30 mA
Insulation method (*Note 5)			Between analog input terminal to FP0 internal circuit: photocoupler insulation (non-insulated between analog inputs) Between analog input terminal to analog I/O unit external power supply: insulation-type DC/DC converter Between analog input terminal to analog output terminal: insulation-type DC/DC converter
Number of input contact points			32 input contact points: 16 points for 1st half: analog input CH0 data (WX2) (* Note 6) 16 points for last half: analog input CH1 data (WX3) (* Note 6)

☞ **next page**

☞ Notes

- **(*1): The temperature lower than the temperature of terminal of the analog I/O unit cannot be measured.**
- **(*2): The temperature higher than the temperature of terminal of the analog I/O unit cannot be measured.**
- **(*3): The time noted below is required before the analog data is reflected in the control unit input.**

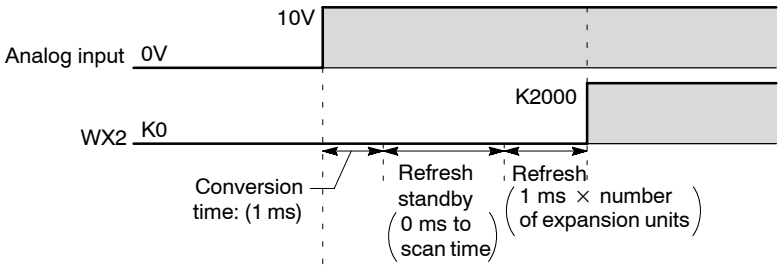

- **(*4): Refer to the *section 4.6 "Boosting the Precision of the Thermocouple Range."**
- **(*5): Refer to the schematic diagram of insulation methods below.**

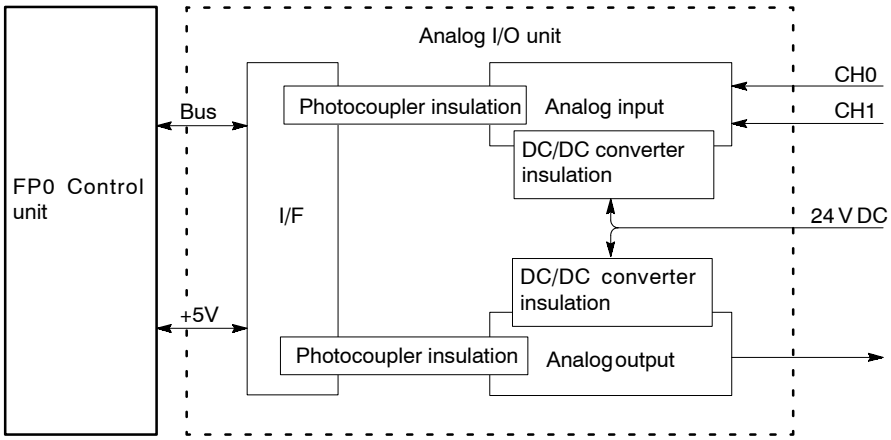

- **(*6): The number for the input contact point being used varies depending on the expansion location (*section 5.4).**

4.2.3 Analog Output Specifications

Item		Description
Number of output points		1 channel/unit
Output range	**Voltage range**	-10 to +10 V
	Current range	0 to 20 mA
Digital input	**-10 to +10 V**	K - 2000 to K + 2000 (HF830 to H07D0)
	0 to 20 mA	K0 to K4000 (H0 to H0FA0)
Resolution		1/4000
Conversion speed		500 μs (* Note 1)
Overall precision		±1% F.S. or less (0 to 55 °C/32 to 131 ° F) ±0.6% F.S. or less (25 °C/77 ° F)
Output impedence	**Voltage range**	0.5 Ω
Maximum output current	**Voltage range**	±10 mA
Allowable output load resistance	**Current range**	300 Ω or less
Insulation method (* Note 2)		Between analog output terminal to FP0 internal circuit: Photocoupler insulation Between analog output terminal to analog I/O unit external power supply: insulation-type DC/DC converter Between analog output terminal to analog input terminal: insulation-type DC/DC converter
Number of output contact points		16 output contact points: analog output data (WY2) (* Note 3)

☞ Notes

- **(*1): The time noted below is required before the analog data is reflected in the control unit output.**

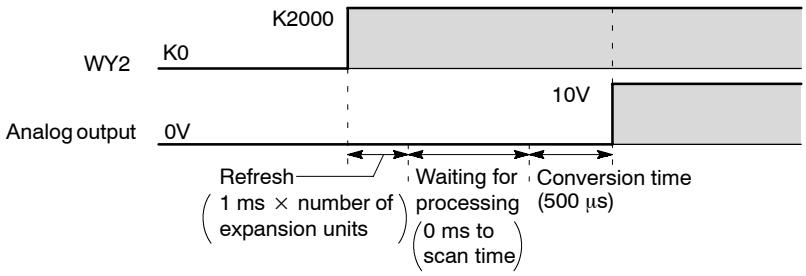

- **(*2): Refer to the schematic diagram of insulation methods on the previous page.**
- **(*3): The number for the output contact point being used varies depending on the expansion location (*section 5.4).**

4.3 A/D Conversion Characteristics

Current range: 0 to 20 mA DC input

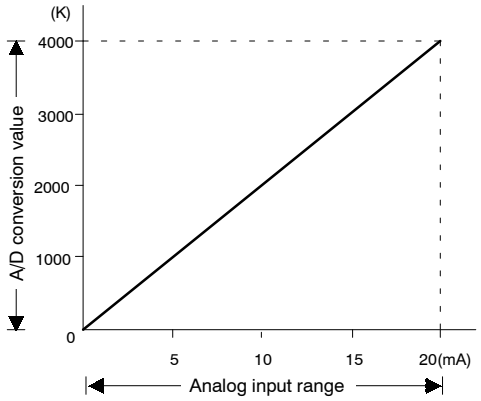

Correspondence table of A/D conversion values

Input current (mA)	A/D conversion value
0.0	0
2.5	500
5.0	1000
7.5	1500
10.0	2000
12.5	2500
15.0	3000
17.5	3500
20.0	4000

Processing if the range is exceeded

Input value	Converted value
0 mA or less (including negative value)	0
20 mA or more	4000

Voltage range: 0 to 5 V DC input

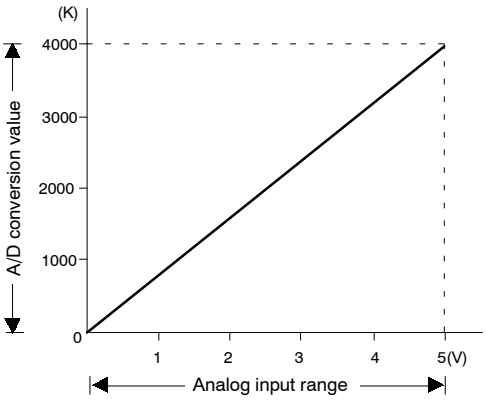

Correspondence table of A/D conversion values

Input voltage (V)	A/D conversion value
0.0	0
0.5	400
1.0	800
1.5	1200
2.0	1600
2.5	2000
3.0	2400
3.5	2800
4.0	3200
4.5	3600
5.0	4000

Processing if the range is exceeded

Input value	Converted value
0 V or less (including negative value)	0
5 V or more	4000

Voltage range: -10 to +10 V DC input

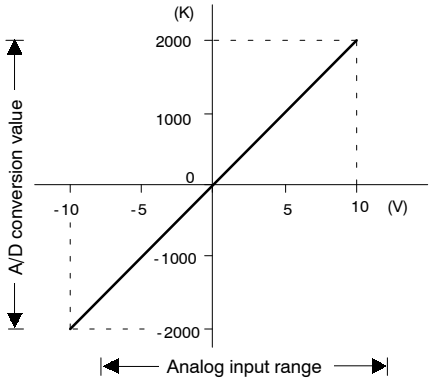

Correspondence table of A/D conversion values

Input voltage (V)	A/D conversion value
-10.0	-2000
-7.5	-1500
-5.0	-1000
-2.5	-500
0.0	0
+2.5	+500
+5.0	+1000
+7.5	+1500
+10.0	+2000

Processing if the range is exceeded

Input value	Converted value
-10 V or less	-2000
+10 V or more	+2000

Thermocouple input:

Setting a temperature higher than the temperature of terminal using the analog mode switch (*section 4.1.1)

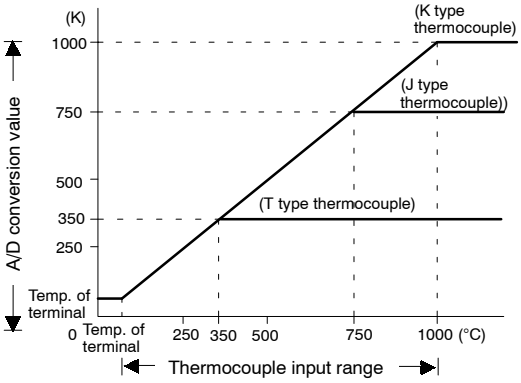

Correspondence table of A/D conversion values

Temperature (°C)	A/D conversion value
Temperature of terminal	Temperature of terminal
25	25
250	250
350	350
500	500
750	750
1000	1000

Processing if the range is exceeded

Input value		Converted value
Temperature of terminal or less		Temperature of terminal
Upper limit	**350 °C or more (with T type thermocouple)**	350
	750 °C or more (with J type thermocouple)	750
	1000 °C or more (with K type thermocouple)	1000
Disconnected		20000

If the measured temperature exceeds the upper limit of the range, a value higher than the upper limit value is not output.

Thermocouple input:

Setting a temperature lower than the temperature of terminal using the analog mode switch (*section 4.1.1)

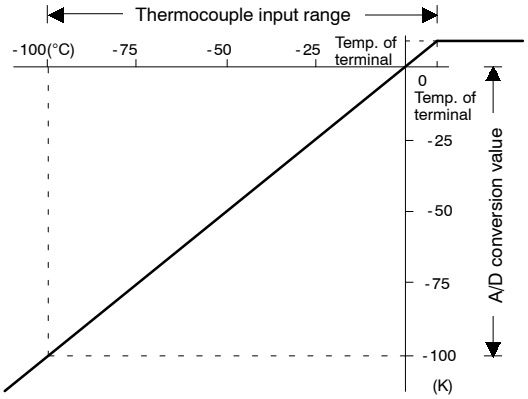

Correspondence table of A/D conversion values

Temperature (°C)	A/D conversion value
Temperature of terminal	Temperature of terminal
0	0
-25	-25
-50	-50
-75	-75
-100	-100

Processing if the range is exceeded

Input value		Converted value
Temperature of terminal or more		Temperature of terminal
Lower limit	**with T type thermocouple**	-250
	with J type thermocouple	-200
	with K type thermocouple	-250
Disconnected		20000

A value is output even if the boundary of the measured value (-100 °C) is exceeded, but the measurement accuracy cannot be guaranteed.

4.4 D/A Conversion Characteristics

Voltage range: -10 to +10 V DC output

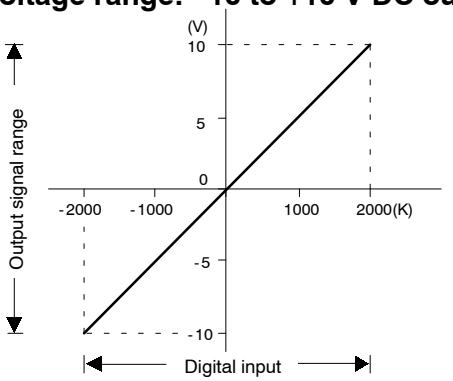

Correspondence table of D/A conversion values

Digital input value	Output voltage (V)
-2000	-10.0
-1500	-7.5
-1000	-5.0
-500	-2.5
0	0.0
+500	+2.5
+1000	+5.0
+1500	+7.5
+2000	10.0

Processing if the range is exceeded

Digital input value	Analog output value
-2001 or less	Constant (value just before -2001 is input)
+2001 or more	Constant (value just before +2001 is input)

Current range: 0 to 20 mA output

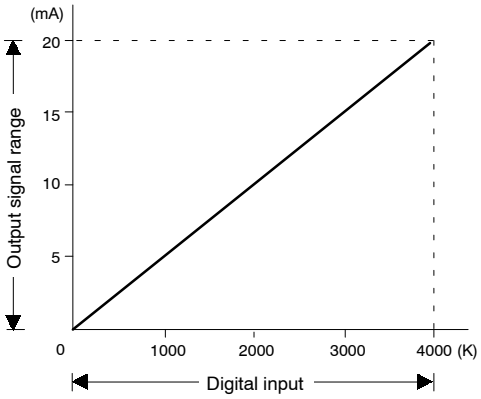

Correspondence table of D/A conversion values

Digital input value	Output current (mA)
0	0.0
500	2.5
1000	5.0
1500	7.5
2000	10.0
2500	12.5
3000	15.0
3500	17.5
4000	20.0

Processing if the range is exceeded

Digital input value	Analog output value
Negative value	Constant (value just before negative value is input)
4001 or more	Constant (value just before 4001 is input)

4.5 Wiring

4.5.1 Analog Input Wiring

Voltage input

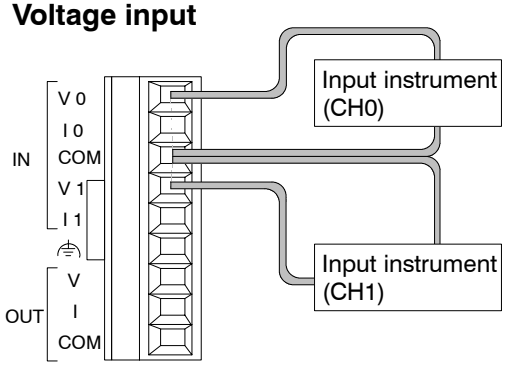

Connect input instrument between IN/V and IN/COM terminal.

Current input

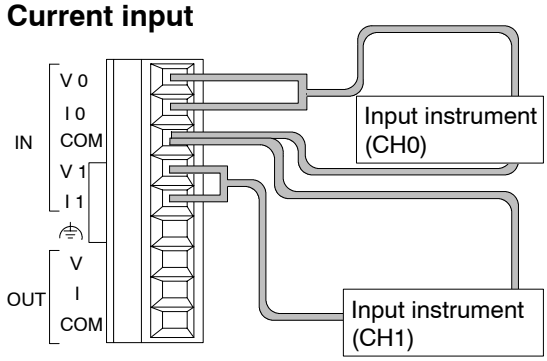

First, connect both IN/V terminal and IN/I terminal. And then connect input instrument between it and IN/COM terminal.

Thermocouple input
(when measured at temperature higher than the temperature of terminal)

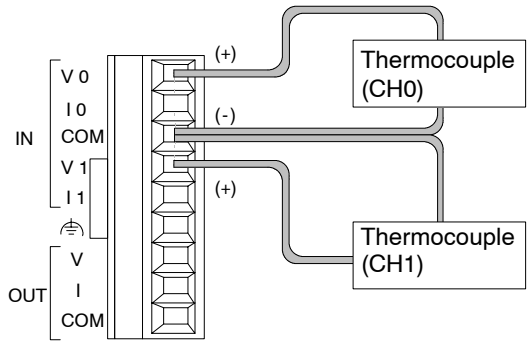

Connect IN/V terminal to the (+) side of the thermocouple, and connect IN/COM terminal to the (-) side of the thermocouple.

Thermocouple input
(when measured at temperature lower than the temperature of terminal)

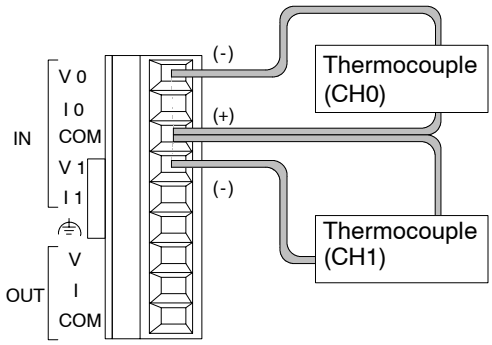

Connect IN/V terminal to the (-) side of the thermocouple, and connect IN/COM terminal to the (+) side of the thermocouple.

4.5.2 Analog Output Wiring

Voltage output

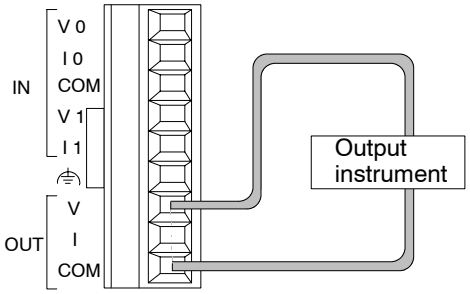

Connect output instrument between OUT/V and OUT/COM terminal.

Current output

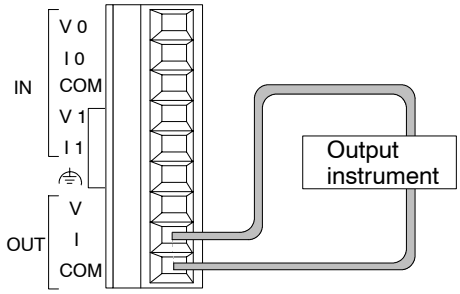

Connect output instrument between OUT/I and OUT/COM terminal.

☞ Notes

- Always make sure the switch settings and the terminal base wiring connections match. For output, in particular, if the settings and the wiring connections are wrong, the control unit will output values like those shown below, even in the PROG. mode. (For information on switch settings, see * section 4.1.1.)

Item	Output terminal (OUT)	
	Current terminal (I)	Voltage terminal (V)
0 mA output based on current range setting	0 mA	-10 V
0 V output based on voltage range setting	10 mA	0 V

- DA internal block diagram
  A voltage amplifier and current amplifier are connected in parallel to a single DA converter IC.

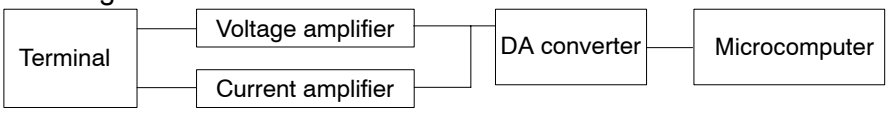

  Also, the digital value that is sent to the DA converter IC to achieve a voltage output of 0 V is different from that input to the DA converter IC to achieve a current output of 0 mA.
  As a result, if the voltage output is set to 0 V, 10 mA is output from the current output terminal, and conversely, if the current output is set to 0 mA, -10 V is output from the voltage output terminal (see tables the next page).

☞ **next page**

- **For voltage output**

Value of WY	K-2000	K0	K2000
Digital value to DA converter	0	2047	4095
Analog output	-10 V	0 V	+10 V

- **For current output**

Value of WY	K0	K2000	K4000
Digital value to DA converter	0	2047	4095
Analog output	0 mA	10 mA	20 mA

4.6 Boosting the Precision of the Thermocouple Range

When a high degree of precision is required, we recommend correcting the offset using the program (we recommend initiating correction using the offset value taken approximately 5 minutes after power is turned ON in order to take has been supplied, taking into consideration the heat generated by the unit itself).

Example

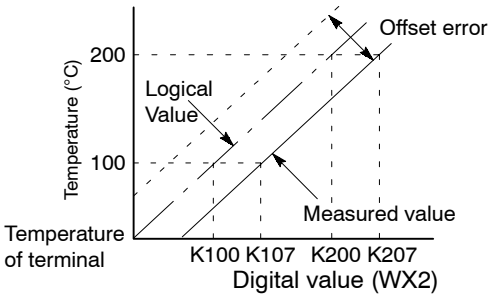

In the above case, seven should be subtracted from the value of WX2.

Program example

```
R9010
─┤ ├─[F27 (-), WX2, K7, DT100 ]
```

The value with the offset value of “7” subtracted is stored at DT100.

4.7 Averaging Function

4.7.1 Averaging for Voltage Ranges and Current Ranges

When the input range is set to a voltage range or current range, processing like that shown below is carried out internally of analog I/O unit.

Operation item	Time chart
Analog input value for ch0	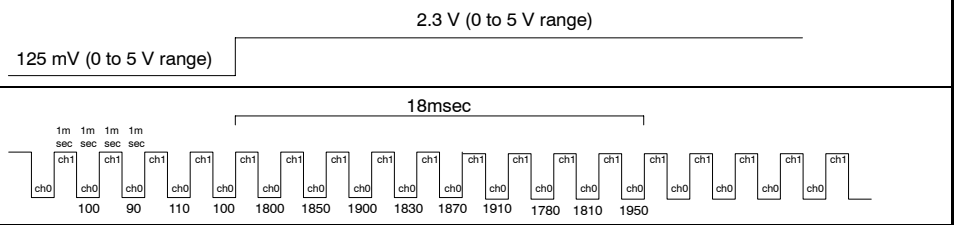
Reading time	
Internal processing for analog I/O unit ch0	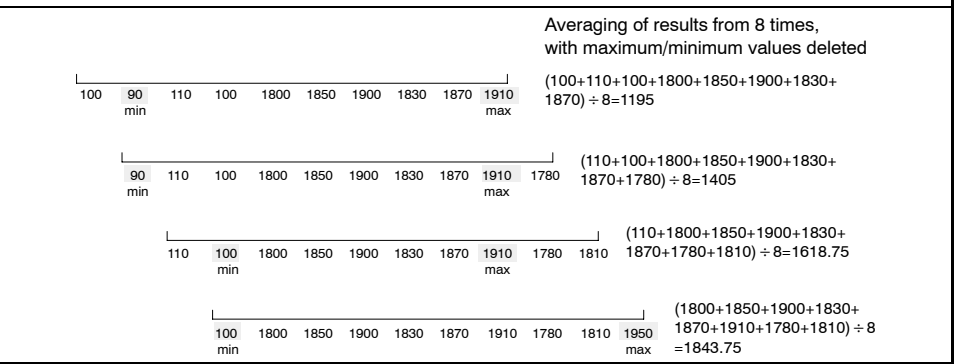
Digital output value for ch0	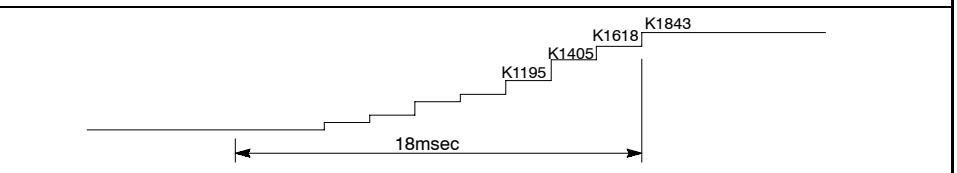

Starting from the most recent data, the data from the last ten times is taken. The maximum and minimum values are deleted, and then averaging is carried out on the remaining eight items. The value obtained from the most recent averaging is normally used as the value output at this time. (If a fraction results from the calculation, it is rounded off.)

4.7.2 Averaging for a Thermocouple Range

When the input range is set to a thermocouple (K, J or T type), processing like that shown below is carried out internally in the analog I/O unit.

Operation item	Time chart
Analog input value ch0 **(thermocouple input)**	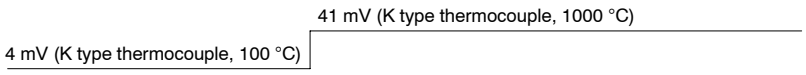
Reading time	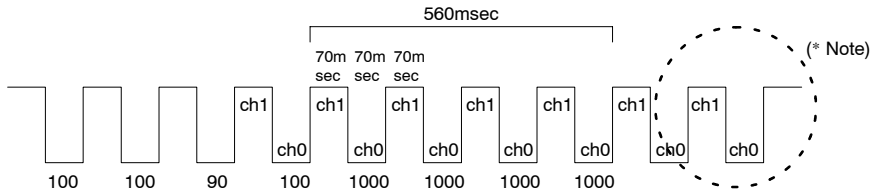
Internal processing for analog I/O unit ch0	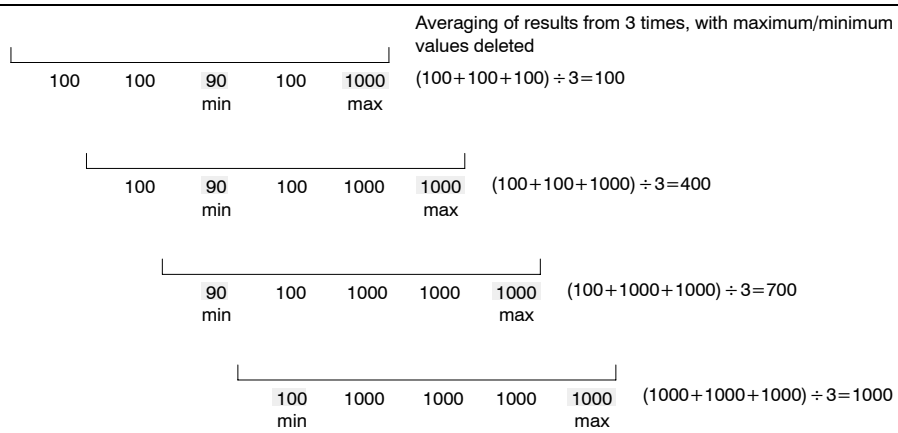
Digital output value (WX) **(temperature °C)**	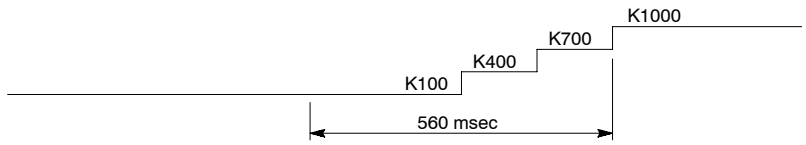

Starting from the most recent data, the data from the last five times is taken. The maximum and minimum values are deleted, and then averaging is carried out on the remaining three items. The value obtained from the most recent averaging is normally used as the value output at this time. (If a fraction results from the calculation, it is rounded off.)

☞ **Note**

In the read timing, the minimum and maximum values are subtracted from the data from the last ten times, just as in averaging processing of section 4.7.1, and the data from the remaining eight times is used for the averaging.

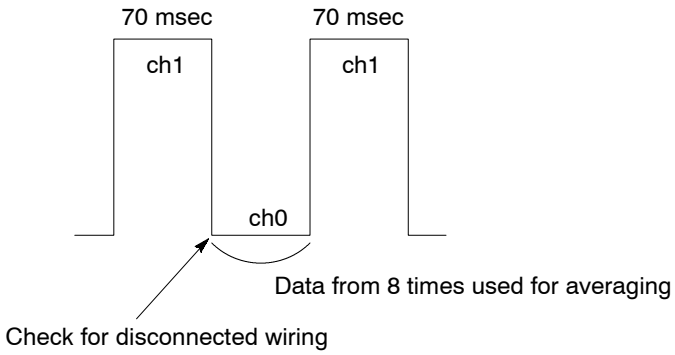

If a disconnected wire is detected, a value of K20000 is output.

Chapter 5

I/O Allocation

5.1 I/O Number . . . . . 5 - 3

5.2 Control Unit . . . . . 5 - 4

5.3 Expansion I/O Unit . . . . . 5 - 5

5.4 Analog I/O Unit . . . . . 5 - 6

5.1 I/O Number

Expression of numbers for input/output relays
Since input relay (X) and output relay (Y) are handled in units of 16 points, they are expressed as a combination of decimal and hexadecimal numbers as shown below.

<Example> External input relay (X)

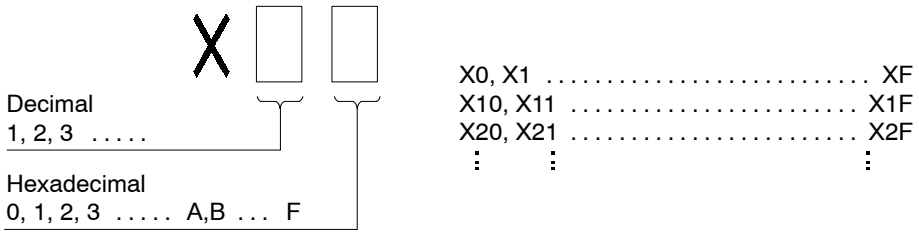

Specifying X and Y numbers
On the FP0, the same numbers are used for input and output.
Example: The same number “X20 and Y20” can be used for input and output

5.2 Control Unit

The I/O allocation of the FP0 control unit is fixed.

Type		I/O number
C10RS, C10CRS, C10RM, C10CRM	**Input: 6 points**	X0 to X5
	Output: 4 points	Y0 to Y3
C14RS, C14CRS, C14RM, C14CRM	**Input: 8 points**	X0 to X7
	Output: 6 points	Y0 to Y5
C16T, C16CT, C16P, C16CP	**Input: 8 points**	X0 to X7
	Output: 8 points	Y0 to Y7
C32T, C32CT, C32P, C32CP	**Input: 16 points**	X0 to XF
	Output: 16 points	Y0 to YF

5.3 Expansion I/O Unit

Up to three expansion I/O units can be added.

I/O numbers do not need to be set as I/O allocation is performed automatically by the FP0 control unit when an expansion I/O unit is added.

The I/O allocation of expansion I/O unit is determined by the installation location.

Type		I/O number		
		First expansion	Second expansion	Third expansion
E8RS/E8RM	Input: 4 points	X20 to X23	X40 to X43	X60 to X63
	Output: 4 points	Y20 to Y23	Y40 to Y43	Y60 to Y63
E8X	Input: 8 points	X20 to X27	X40 to X47	X60 to X67
E8YT/E8YP	Output: 8 points	Y20 to Y27	Y40 to Y47	Y60 to Y67
E16RS/E16RM/ E16T/E16P	Input: 8 points	X20 to X27	X40 to X47	X60 to X67
	Output: 8 points	Y20 to Y27	Y40 to Y47	Y60 to Y67
E16X	Input: 16 points	X20 to X2F	X40 to X4F	X60 to X6F
E16YT/E16YP	Output: 16 points	Y20 to Y2F	Y40 to Y4F	Y60 to Y6F
E32T/E32P	Input: 16 points	X20 to X2F	X40 to X4F	X60 to X6F
	Output: 16 points	Y20 to Y2F	Y40 to Y4F	Y60 to Y6F

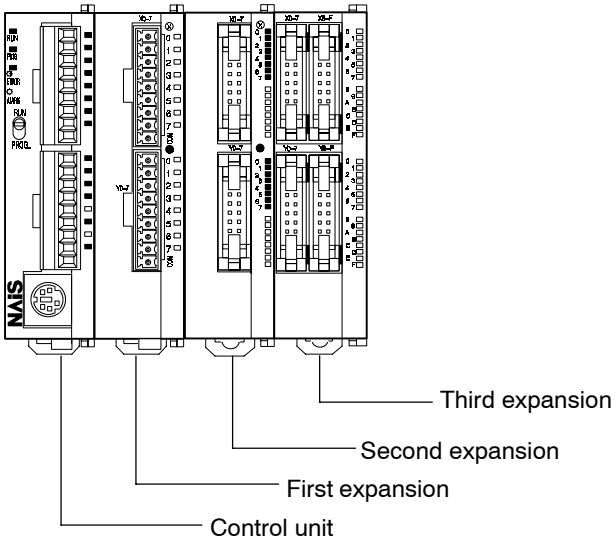

5.4 Analog I/O Unit

Up to three analog I/O units can be added.

The I/O allocation of analog I/O unit is determined by the installation location.

Type		I/O number		
		First expansion	Second expansion	Third expansion
A21	Input channel 0: 16 points	WX2 (X20 to X2F)	WX4 (X40 to X4F)	WX6 (X60 to X6F)
	Input channel 1: 16 points	WX3 (X30 to X3F)	WX5 (X50 to X5F)	WX7 (X70 to X7F)
	Output: 16 points	WY2 (Y20 to Y2F)	WY4 (Y40 to Y4F)	WY6 (Y60 to Y6F)

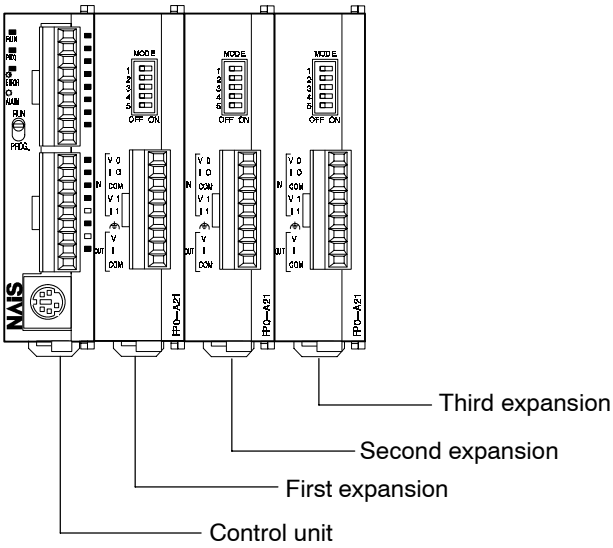

Chapter 6

Installation

6.1 Adding Expansion Units . . . . . 6 - 3

6.2 Important Notes . . . . . 6 - 5

6.3 Attachment to DIN Rails . . . . . 6 - 8

6.4 Installation Using FP0 Slim Type Mounting Plate . . . . . 6 - 9

6.5 Installation Using FP0 Flat Type Mounting Plate . . . . . 6 - 10

6.1 Adding Expansion Units

Expansion method

1. Peel the seal on the side of the unit so that the internal connector is exposed.

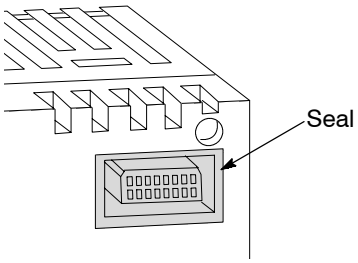

☞ **Notes**

- **When peeling the seal on the side of the initial lot products, the shaded part is exposed. Cut off the shaded part with a pair of nippers or similar tool so that the internal connector is exposed.**

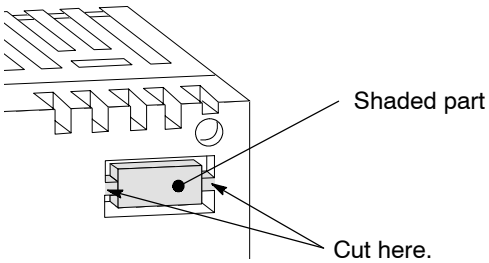

- **When removing the shaded part, use a sharp cutting object, making sure that the shaded part is removed leaving a smooth surface. Note that failure to remove the shaded part completely can result in damage to the connector.**

☞ **next page**

2. Raise the expansion hooks on the top and bottom sides of the unit with a screwdriver.

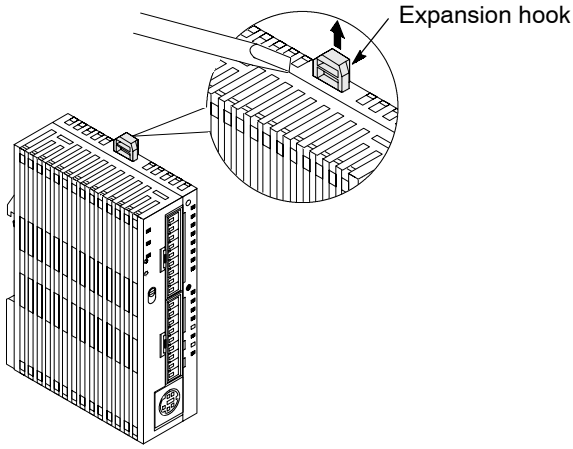

3. Align the pins and holes in the four corners of the control unit and expansion unit, and insert the pins into the holes so that there is no gap between the units.

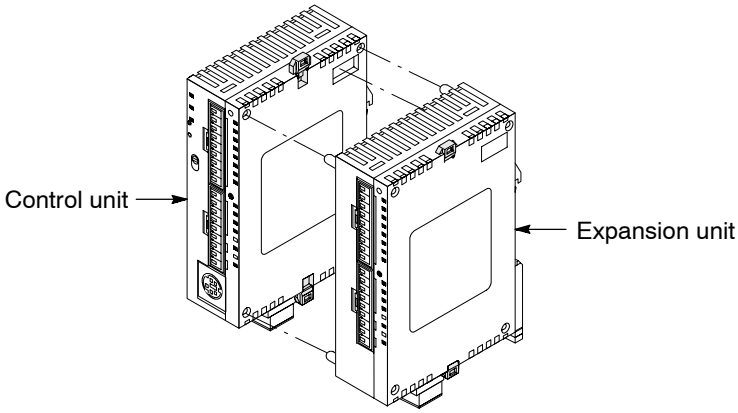

4. Press down the expansion hooks raised in step 2 to secure the unit.

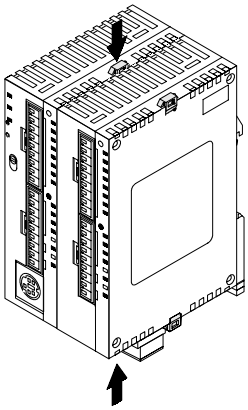

6.2 Important Notes

Please, read the following notes carefully before the installation of your FP0.

☞ **Notes**

- **Avoid installing the unit in the following locations:**
  - **Ambient temperatures outside the range of 0°C to 55°C/32°F to 131°F**
  - **Ambient humidity outside the range of 30% to 85% RH**
  - **Sudden temperature changes causing condensation**
  - **Inflammable or corrosive gases**
  - **Excessive airborne dust or metal particles**
  - **Benzine, paint thinner, alcohol or other organic solvents or strong alkaline solutions such as ammonia or caustic soda**
  - **Excessive vibration or shock**
  - **Direct sunlight**
  - **Water in any form including spray or mist**
- **Avoid noise interference from the following items:**
  - **Influence from power transmission lines, high voltage equipment, power cables, power equipment, radio transmitters, or any other equipment that would generate high switching surges**
  - **If noise occurs in the power supply line even after the above countermeasures are taken, it is recommended to supply power through an insolated transformer, noise filter, or like.**

☞ **next page**

- **Measures regarding heat discharge**
  - **Always install the unit orientated with the tool port facing outward on the bottom in order to prevent the generation of heat.**

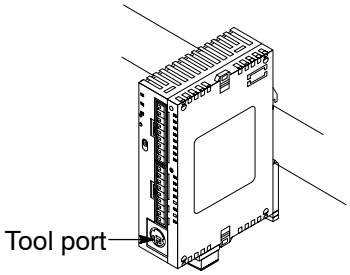

  - **Do not install the FP0 control unit as shown below.**

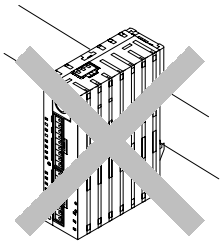

Upside-down

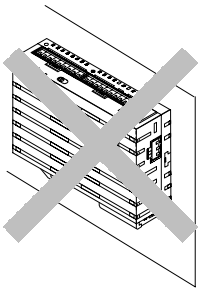

I/O connectors or I/O terminals on top

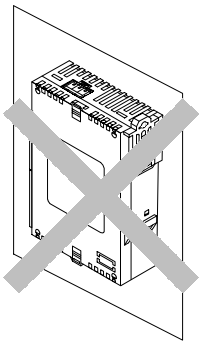

Installation which blocks the air duct

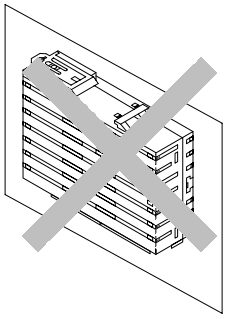

Installations such that the I/O connectors or I/O terminals face down

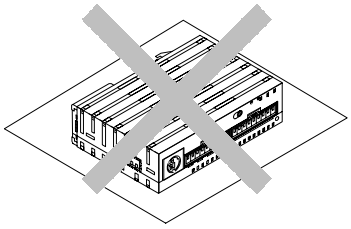

Horizontal installation of the unit

  - **Do not install the unit above devices which generate heat such as heaters, transformers or large scale resistors.**

☞ **next page**

- **Installation space**
  - **Leave at least 50 mm/1.97 in. of space between the wiring ducts of the unit and other devices to allow heat radiation and unit replacement.**

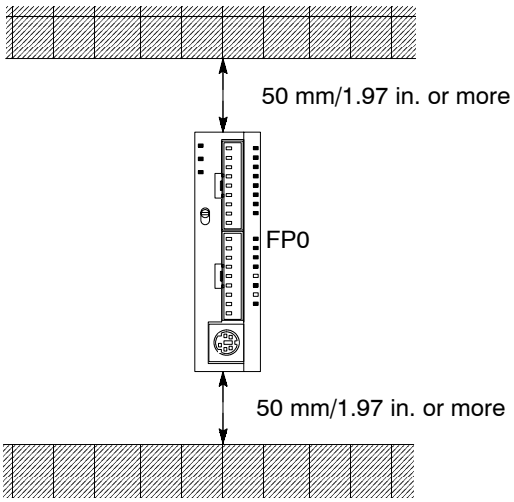

  - **Maintain a minimum of 100 mm/3.937 in. between devices to avoid adverse affects from noise and heat when installing a device or panel door to the front of the FP0 unit.**

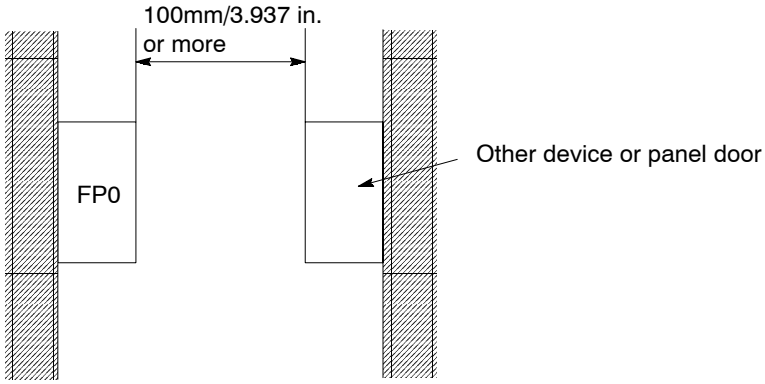

  - **Keep the first 100 mm/3.937 in. from the front surface of the FP0 control unit open in order to allow room for programming tool connections and wiring.**

6.3 Attachment to DIN Rails

The FP0 unit enables one-touch attachment to DIN rails.

Procedure:

1. **Fit the upper hook of the FP0 unit onto the DIN rail.**
2. **Without moving the upper hook, press on the lower hook to fit the FP0 unit into position.**

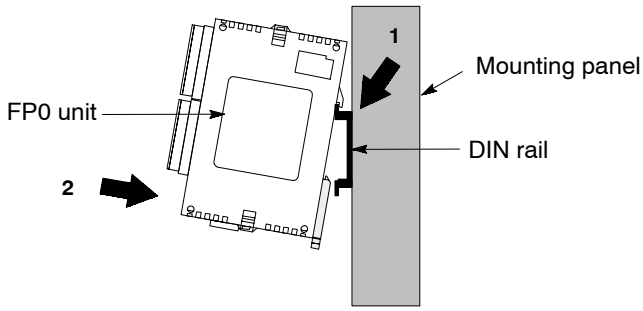

You can easily remove the FP0 unit as described below.

Procedure:

1. **Insert a slotted screwdriver into the DIN rail attachment lever.**
2. **Pull the attachment lever downwards.**
3. **Lift up the FP0 unit and remove it from the rail.**

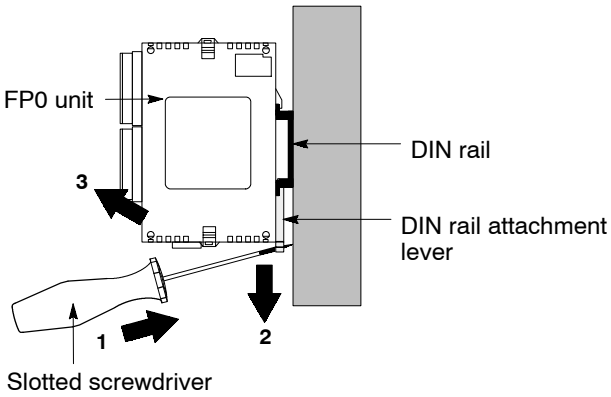

6.4 Installation Using FP0 Slim Type Mounting Plate

Use M4 size pan-head screws for attachment of FP0 slim type mounting plate (AFP0803) to mounting panel. For a diagram showing detailed dimensions of the FP0 slim type mounting plate, see *section A.4.

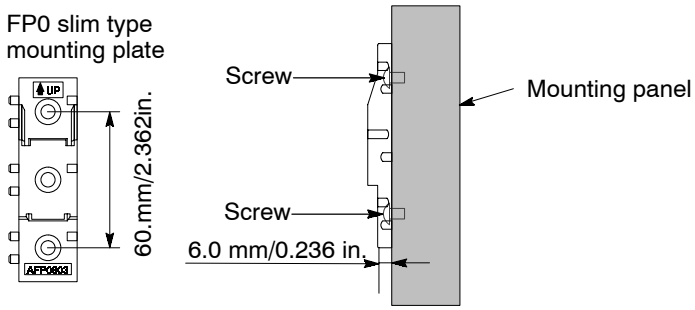

Procedure:

1. **Fit the upper hook of the FP0 unit onto the FP0 slim type mounting plate.**
2. **Without moving the upper hook, press on the lower hook to fit the FP0 unit into position.**

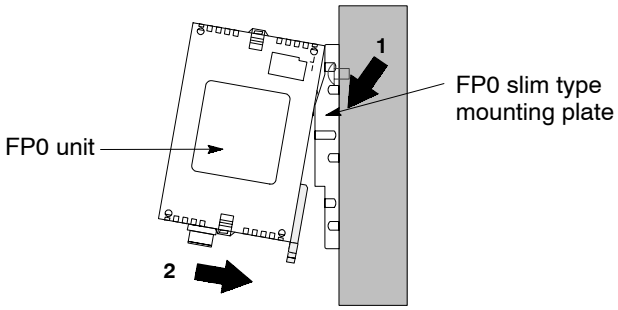

When using an expansion unit, tighten the screws after joining all of the FP0 slim type mounting plate to be connected. Tighten the screws at each of the four corners.

Example: Two expansion units

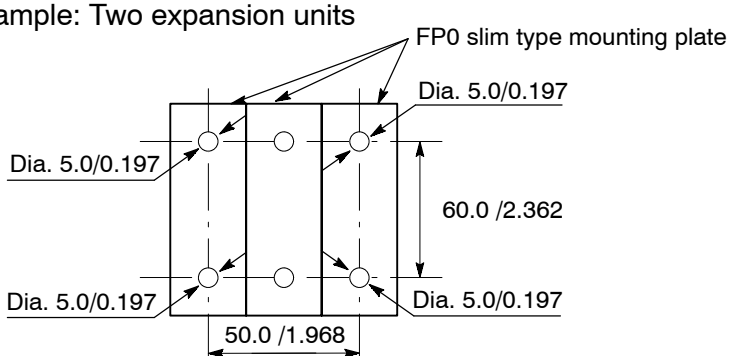

(unit: mm/in.)

6.5 Installation Using FP0 Flat Type Mounting Plate

Use M4 size pan-head screws for attachment of FP0 flat type mounting plate (AFP0804) and install according to the dimensions shown below.

For a diagram showing detailed dimensions of the FP0 flat type mounting plate, see *section A.5.

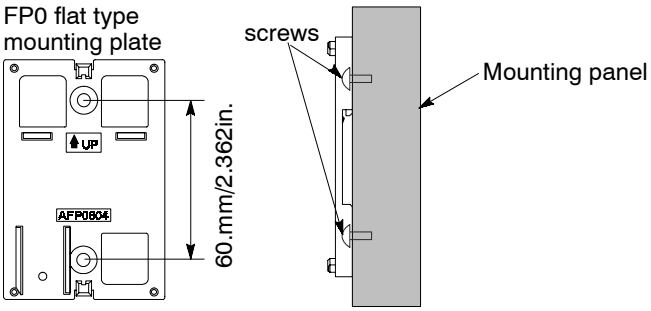

Procedure:

1. **Raise the expansion hooks on the top and bottom of the unit.**
2. **Install the FP0 unit on the FP0 flat type mounting plate.**
3. **Align the expansion hooks with the plate and press the hooks back down.**

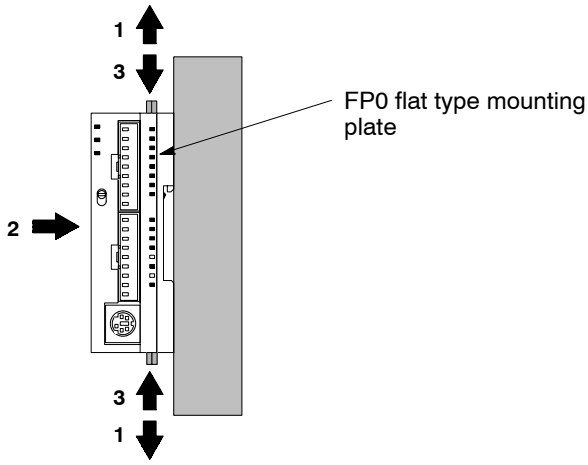

☞ **Notes**

- **The FP0 flat type mounting plate (AFP0804) cannot be used for an expansion unit.**

☞ **next page**

- **An FP0 unit with an attached FP0 flat type mounting plate can also be installed sideways on a DIN rail.**

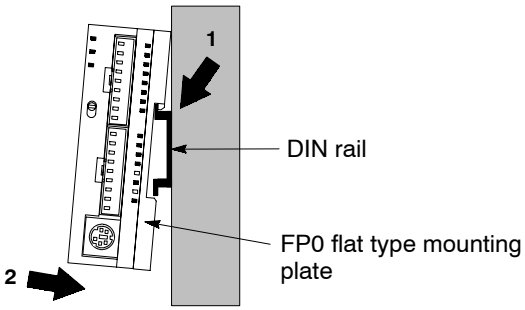

6.5 Installation Using FP0 Flat Type Mounting Plate

Chapter 7

Wiring

7.1 Safety Instructions . . . . . 7 - 3

7.1.1 Interlock Circuit . . . . . 7 - 3

7.1.2 Emergency Stop Circuit . . . . . 7 - 3

7.1.3 Start Up Sequence . . . . . 7 - 3

7.1.4 Momentary Power Failures . . . . . 7 - 4

7.1.5 Protecting Power Supply and Output Sections . . . . . 7 - 4

7.2 Wiring the Power Supply to the Control Unit . 7 - 5

7.3 Grounding . . . . . 7 - 7

7.4 Input Wiring . . . . . 7 - 8

7.4.1 Sensors . . . . . 7 - 8

7.4.2 LED-Equipped Reed Switch . . . . . 7 - 9

7.4.3 Two-Wire Type Sensor . . . . . 7 - 9

7.4.4 LED-Equipped Limit Switch . . . . . 7 - 10

7.5 Output Wiring . . . . . 7 - 11

7.5.1 Protective Circuit for Inductive Loads . . . . . 7 - 11

7.5.2 Precautions for Using Capacitive Loads . . . . . 7 - 12

7.6 Wiring the Terminal Type . . . . . 7 - 13

7.7 Wiring the MOLEX Connector Type . . . . . 7 - 15

7.8 Wiring the MIL Connector Type . . . . . 7 - 17

7.8.1 Contact Puller Pin for Rewiring . . . . 7 - 18

7.9 Wiring the RS232C Port . . . . . 7 - 19

7.1 Safety Instructions

In certain applications, malfunction may occur for the following reasons:

- Power ON timing differences between the FP0 control unit and I/O or motorized devices
- An operation time lag when a momentary power drop occurs
- Abnormality in the FP0 unit, power supply circuit, or other devices

In order to prevent a malfunction resulting in system shutdown choose the adequate safety circuits or other safety measures listed in the following:

7.1.1 Interlock Circuit

When a motor clockwise/counter-clockwise operation is controlled, provide an interlock circuit that prevents clockwise and counter-clockwise signals from inputting into the motor at the same time.

7.1.2 Emergency Stop Circuit

Add an emergency stop circuit to controlled devices in order to prevent a system shutdown or an irreparable accident when malfunction occurs.

7.1.3 Start Up Sequence

The FP0 should be operated after all of the outside devices are energized. To keep this sequence, the following measures are recommended:

- Set the mode switch from PROG. mode to RUN mode after power is supplied to all of the outside devices
- Program the FP0 so as to disregard the inputs and outputs until the outside devices are energized

☞ **Note**

When stopping the operation of FP0 also, have the I/O devices turned OFF after the FP0 has stopped operating.

☞ **next page**

7.1.4 Momentary Power Failures

If the duration of the power failure is less than 5 ms, the FP0 continues to operate. If the power is OFF for 5 ms or longer, operation changes depending on the combination of units, the power supply voltage, and other factors. (In some cases, operation may be the same as that for a power supply reset.)

If operation is to be continued following recovery from the momentary power failure, use an automatic retaining sequence program that uses a hold type internal relay.

7.1.5 Protecting Power Supply and Output Sections

An insulated power supply with an internal protective circuit should be used. The power supply for the control unit operation is a non-insulated circuit, so if an incorrect voltage is directly applied, the internal circuit may be damaged or destroyed. If using a power supply without a protective circuit, power should be supplied through a protective element such as a fuse.

If current exceeding the rated control capacity is being supplied in the form of a motor lock current or a coil shorting in an electromagnetic device, a protective element such as a fuse should be attached externally.

7.2 Wiring the Power Supply to the Control Unit

Use the power supply cable (AFP0581) that comes with the unit to connect the power supply.

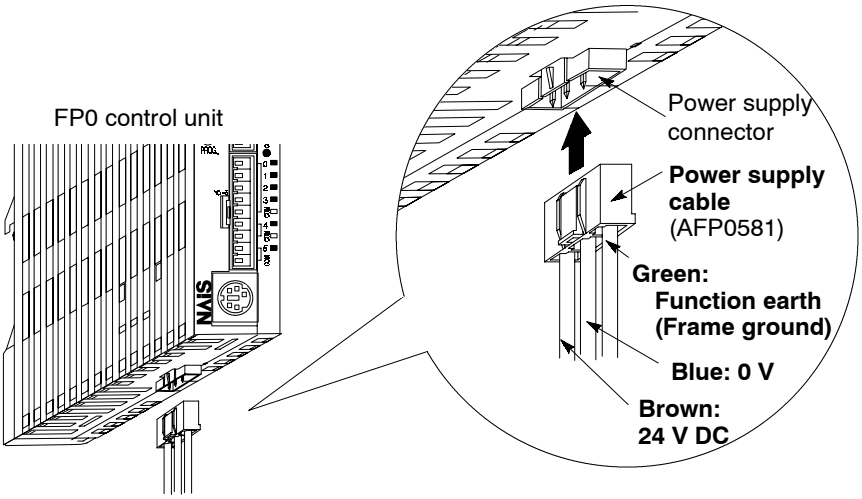

Item	Descriptions
Rated voltage	24 V DC
Operating voltage range	21.6 to 26.4 V DC

☞ **Notes**

- **To minimize adverse effects from noise, twist the brown and blue wires of the power supply cable.**
- **To protect the system against erroneous voltage from the power supply line, use an insulated power supply with an internal protective circuit.**
- **The regulator on the FP0 unit is a non-insulated type.**
- **If using a power supply device without an internal protective circuit, always make sure power is supplied to the unit through a protective element such as a fuse.**

☞ **next page**

- **Isolate the wiring systems to the FP0, input/output devices, and motor devices.**

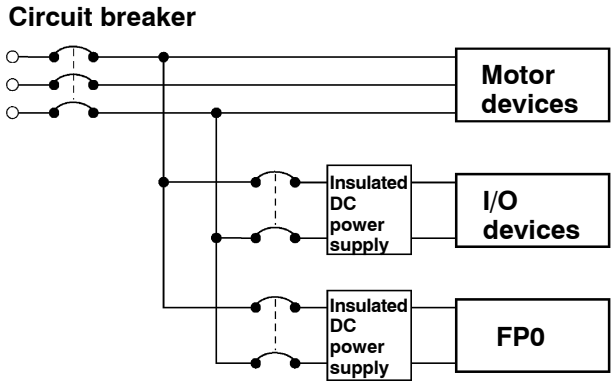

- **The power supply sequence should be set up so that power to the control unit is turned OFF before the input/output power supplies.**
- **If the input/output power supplies are turned OFF before the power to the control unit, the FP0 control unit may detect a drop in the input level, and malfunction.**
- **Be sure to supply power to a control unit and an expansion unit from the same power supply, and turn the power ON and OFF simultaneously for both.**

7.3 Grounding

Under normal conditions, the inherent noise resistance is sufficient. However, in situations of excess noise, ground the instrument to increase noise suppression.

For grounding purposes, use wiring with a **minimum of 2 mm^2**. The grounding connection should have a resistance of **less than 100 •** .

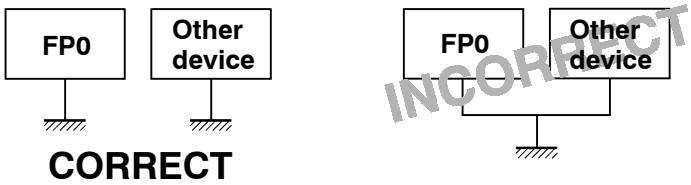

☞ **Notes**

- **The point of grounding should be as close to the FP0 control unit as possible. The ground wire should be as short as possible.**
- **If two devices share a single ground point, it may produce an adverse effect. Always use an exclusive ground for each device.**
- **Depending on the surroundings in which the equipment is used, grounding may cause problems.**
  <Example>
  Since the power supply line (24 VDC and GND terminal) of the FP0 power supply connector is connected to the frame ground (F.G.) through a varistor, if there is an irregular potential between the power supply line (24 VDC and GND) and earth, the varistor may be shorted.

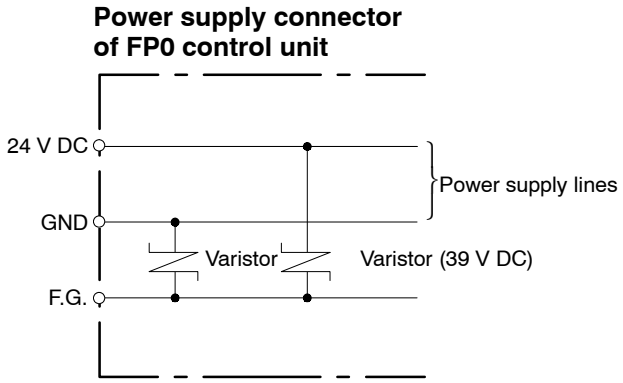

7.4 Input Wiring

☞ **Notes**

- **Be sure to select the thickness (dia.) of the input wires while taking into consideration the required current capacity.**
- **Arrange the wiring so that the input and output wiring are separated, and so that the input wiring is separated from the power wiring, as much as possible. Do not route them through the same duct or wrap them up together.**
- **Separate the input wires from the power and high voltage wires by at least 100 mm/3.937 in.**

In this section you find some examples for wiring sensors, an LED-equipped reed switch, a two-wire type sensor and a LED-equipped limit switch.

7.4.1 Sensors

Relay output type

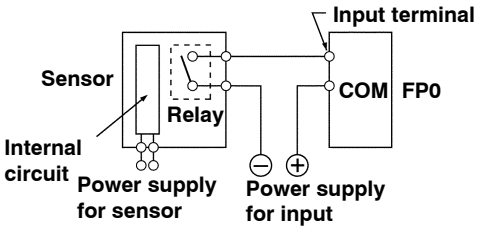

NPN open collector output type

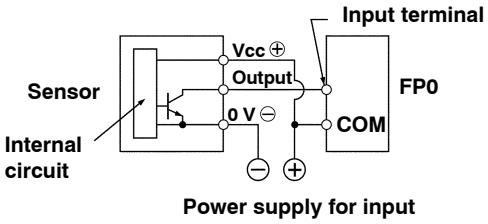

Universal output type

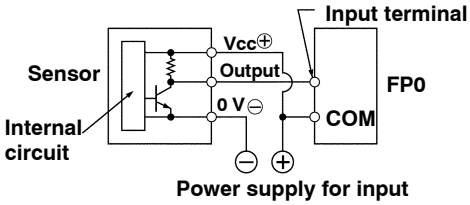

Two-wire type (* next page)

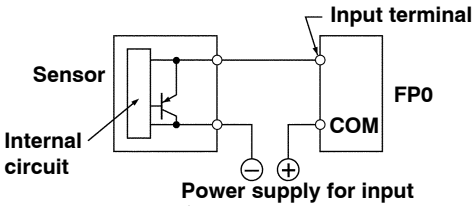

PNP open collector output type

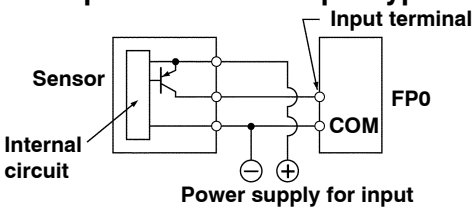

7.4.2 LED-Equipped Reed Switch

When a LED is connected to an input contact such as LED-equipped reed switch, make sure that the ON voltage applied to the FP0 input circuit is greater than 19.2 V DC. In particular, take care when connecting a number of switches in series.

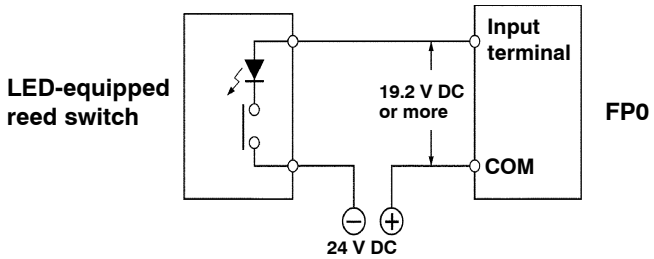

7.4.3 Two-Wire Type Sensor

If the input of the FP0 does not turn OFF because of leakage current from the two-wire type sensor, the use of a bleeder resistor is recommended, as shown below.

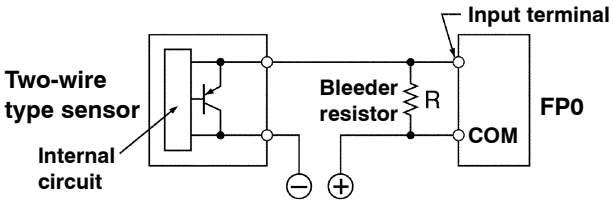

I: Sensor's leakage current (mA)

R: Bleeder resistor (kΩ)

The OFF voltage of the FP0 input is 2.4 V, therefore, select an R value so that the voltage between the COM terminal and the input terminal will be less than 2.4 V.
(The impedance of the FP0 input terminal is 5.6 kΩ.)

The resistance R of the bleeder resistor is: $R \leqq \dfrac{13.44}{5.6 \times I - 2.4}$ (kΩ)

The wattage W of the resistor is:

$$W = \frac{(\text{Power supply voltage})^2}{R}$$

In the actual selection, use a value that is 3 to 5 times the value of W.

7.4.4 LED-Equipped Limit Switch

If the input of the FP0 does not turn OFF because of the leakage current from the LED-equipped limit switch, the use of a bleeder resistor is recommended, as shown below.

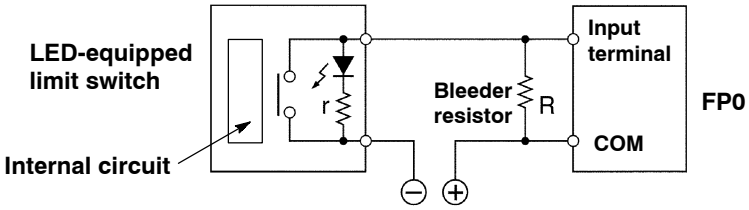

r: Internal resistor of limit switch (kΩ)

R: Bleeder resistor (kΩ)

The OFF voltage of the FP0 input is 2.4 V, therefore when the power supply voltage is 24 V, select R so that

the current will be greater than $I = \frac{24 - 2.4}{r}$

The resistance R of the bleeder resistor is: $R \leqq \frac{13.44}{5.6 \times I - 2.4}$ (kΩ)

The wattage W of the resistor is: $W = \frac{(\text{Power supply voltage})^2}{R}$

In the actual selection, use a value that is 3 to 5 times the value of W.

7.5 Output Wiring

☞ **Notes**

- **There is no fuse protection built into the output circuit. Therefore, in order to protect against overheating of the output circuitry caused by possible short circuits, install an external fuse at each point. However, in cases such as short circuits, the control unit itself may not be protected.**
- **Be sure to select the thickness (dia.) of the output wires while taking into consideration the required current capacity.**
- **Arrange the wiring so that the input and output wiring are separated, and so that the output wiring is separated from the power wiring, as much as possible. Do not route them through the same duct or wrap them up together.**
- **Separate the output wires from the power and high voltage wires by at least 100 mm/3.937 in.**

Protect the outputs as described below:

7.5.1 Protective Circuit for Inductive Loads

With an inductive load, a protective circuit should be installed in parallel with the load.

When switching DC inductive loads with FP0 relay output type, be sure to connect a diode across the ends of the load.

When using an AC inductive load

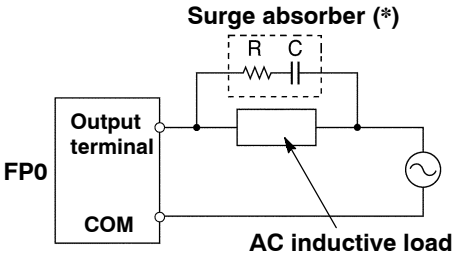

(*) Example of surge absorber:
[R: 50 Ω, C: 0.47 μF]

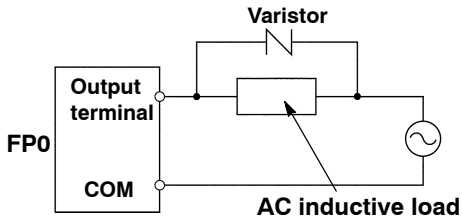

☞ **next page**

When using a DC inductive load

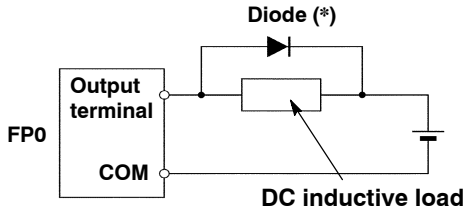

(*) Diode:

[Reverse voltage (V_R): 3 times the load voltage
Average rectified forward current (I_0): Load current or more]

7.5.2 Precautions for Using Capacitive Loads

When connecting loads with large in-rush currents, to minimize their effect, connect a protection circuit as shown below.

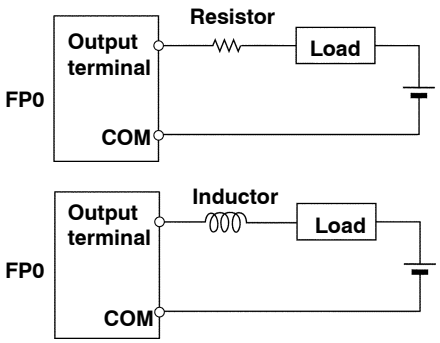

7.6 Wiring the Terminal Type

A screw-down connection type terminal block socket for terminal of FP0 control unit and analog I/O unit is used. The terminal block socket and suitable wires are given below.

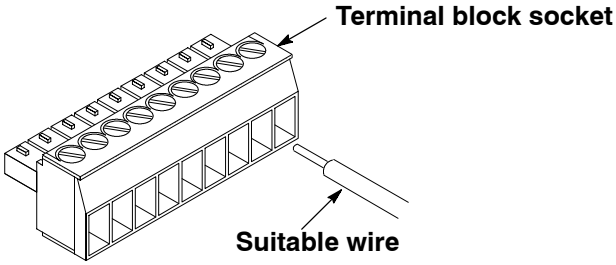

Terminal block socket

Item	Description
Manufacturer	Phoenix Contact Co.
Model	MC1,5/9-ST-3,5
Product number	1840434

Suitable wires (twisted wire)

Item	Description
Control unit	Size: AWG #24 to 16
	Conductor cross-sectional area: 0.3 to 1.25 mm^2
Analog I/O unit	Size: AWG #28 to 16
	Conductor cross-sectional area: 0.08 to 1.25 mm^2

Pole terminal with a compatible insulation sleeve

If a pole terminal is being used, the following models are marketed by Phoenix Contact Co.

Manufacturer	Cross-sectional area (mm^2)	Size	Product number
Phoenix Contact Co.	0.25	AWG #24	AI 0,25-6YE
	0.50	AWG #20	AI 0,5-6WH
	0.75	AWG #18	AI 0,75-6GY
	1.00	AWG #18	AI 1-6RD

Pressure welding tool for pole terminals

Manufacturer	Phoenix Contact Co.
Type	CRIMPFOX UD6
Product number	12 04 43 6

When tightening the terminals of the terminal block socket, use a screwdriver (Phoenix Contact Co., Product no. 1205037) with a blade size of 0.4 × 2.5. The tightening torque should be 0.22 to 0.25 N·m (2.3 to 2.5 kgf·cm) or less.

Procedure:

1. **Remove a portion of the wire's insulation.**

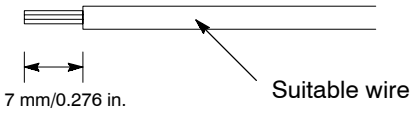

2. **Insert the wire into the terminal block socket until it contacts the back of the block socket, and then tighten the screw clockwise to fix the wire in place.**

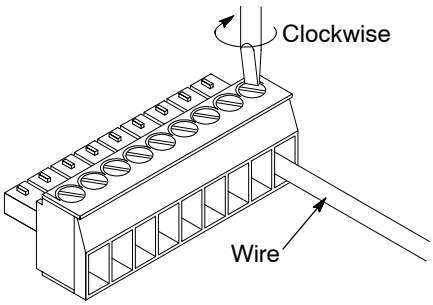

☞ **Notes**

- **When removing the wire's insulation, be careful not to scratch the core wire.**
- **Do not twist the wires to connect them.**
- **Do not solder the wires to connect them. The solder may break due to vibration.**
- **After wiring, make sure stress is not applied to the wire.**
- **In the terminal block socket construction, if the wire closes upon counter-clockwise rotation, the connection is faulty. Disconnect the wire, check the terminal hole, and then re-connect the wire.**

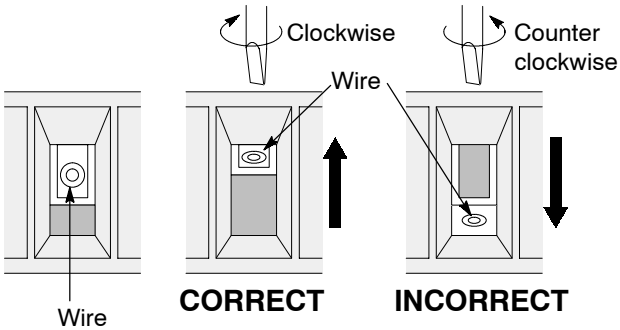

7.7 Wiring the MOLEX Connector Type

The housings and contacts listed below come supplied with the FP0. Use the wires given below. Also, use the required special tool for connecting the wires.

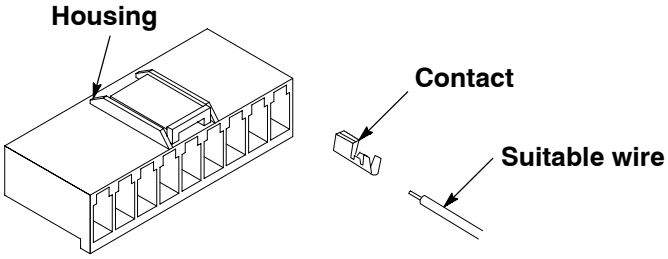

Supplied connector

Manufacturer	Item	Product number
Molex Japan Co., Ltd.	Housing	51067-0900 (2 pieces)
	Contact	50217-8100 (20 pieces)

Suitable wires (twisted wire)

- Size: AWG #24 to 18
- Conductor cross-sectional area: 0.2 to 0.75 mm^2
- Insulation outside diameter: dia. 1.4 to dia. 3.0

Special crimping tool

- Manufacturer: Molex Japan Co., Ltd
- Product number: 57189-5000

Procedure:

1. Remove a portion of the wire's insulation.

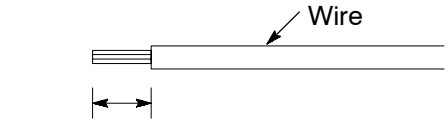

☞ **next page**

2. Place the contact in the crimping tool, place the wire in the contact and lightly squeeze the tool.

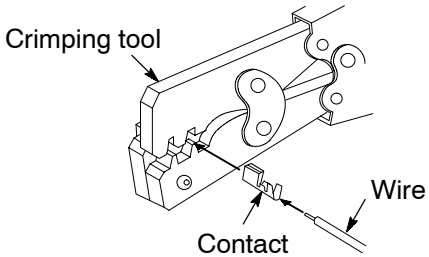

3. Insert the crimped wire into the housing until it contacts the back side.

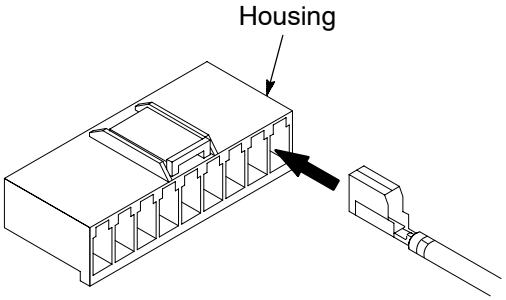

☞ **Note**

When removing a wire, use a flat-head screwdriver, or other similar tool, to pull up the hold-down pin of the housing and then pull out the wire.

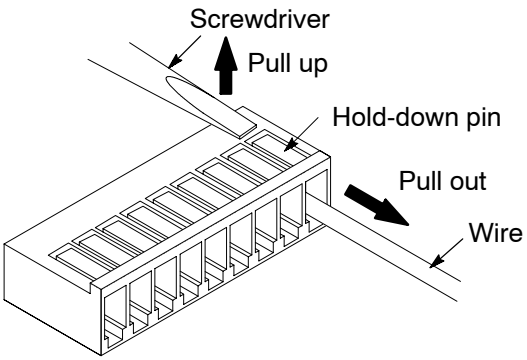

7.8 Wiring the MIL Connector Type

The housings, semi-cover and pressure welders listed below come supplied with the FP0. Use the wires given below. Also, use the required pressure connection tools for connecting the wires.

Supplied connector

Unit	Type/Order number		C16/E16	C32/E32
C16/C32 E16/E32	Housing	10-pin type only	2 pieces	4 pieces
	Semi-cover	AXW61001	2 pieces	4 pieces
	Welder (contact)	AXW7221	5-pin × 4	5-pin × 8

Suitable wires (twisted wire)

Size	Conductor cross-sectional area	Insulation thickness	Rated current
AWG#22	0.3 mm^2	dia. 1.5 to dia. 1.1	3A
AWG#24	0.2 mm^2		

Pressure connection tool

- Order number: AXY52000

Procedure:

The wire end can be directly crimped without removing the wire's insulation, saving labor.

1. **Bend the welder (contact) back from the carrier, and set it in the pressure connection tool.**

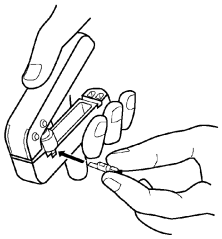

2. **Insert the wire without removing its insulation until it stops, and lightly grip the tool.**

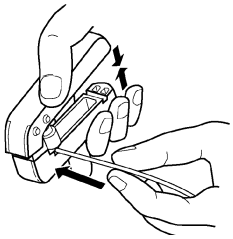

☞ **next page**

3. After press-fitting the wire, insert it into the housing.

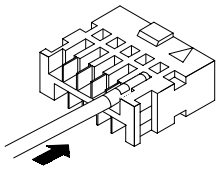

4. When all wires has been inserted, fit the semi-cover into place.

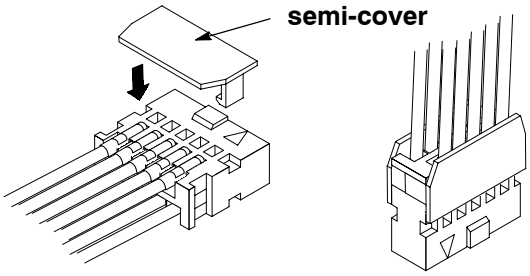

☞ **Note**

If using a MIL connector for flat cables, please specify the order number AXM110915.

7.8.1 Contact Puller Pin for Rewiring

If there is a wiring mistake or the cable is incorrectly pressure-connected, the contact puller pin provided with the fitting can be used to remove the contact.

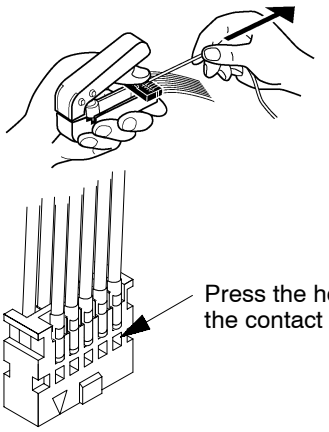

7.9 Wiring the RS232C Port

When using the RS232C port, use the screw-down connection type terminal and the wire according to the following procedures.

FP0 Control unit with RS232C port
(FP0 C10CRM/C10CRS/C14CRM/C14CRS/C16CT/C16CP/C32CT/C32CP)

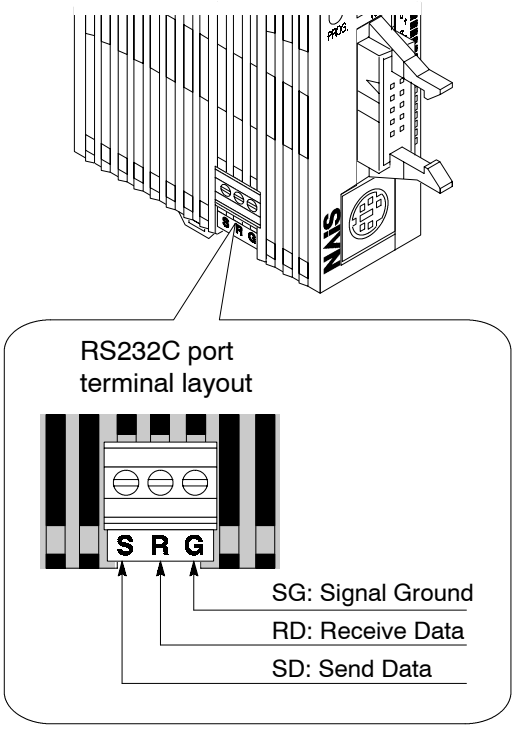

Item	Specification
Baud rate	300/600/1200/2400/4800/ 9600/19200 bps
Transmission distance	3m/9.84 ft.
Terminal block	Made by Phoenix Contact Co. (3-pin) Product number: MKDS 1/3-3.5
Communication method	half-duplex

Settings when shipped from the factory
These are changed using system registers 412 to 414. The settings in effect when the unit is shipped from the factory are noted below.

412	RS232C port is not used.
413	Character bit: 8 bits Parity check: odd Stop bit: 1 bit Header: without STX code Terminator: CR
414	Baud rate: 9600 bps

Suitable wires (twisted wire)

- Size: AWG #28 to 16
- Conductor cross-sectional area: 0.08 to 1.25 mm^2

Use a shielded wire of the above wiring. We recommend grounding the shield section. Also, if using a pole terminal, see * section 7.6.

When tightening the RS232C port, use a screwdriver (Phoenix Contact Co., Product no. 1205037) with a blade size of 0.4 × 2.5. The tightening torque should be 0.22 to 0.25 N · m (2.3 to 2.5 kgf · cm) or less.

Procedure:

1. **Remove a portion of the wire's insulation.**

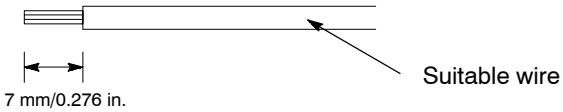

2. **Insert wire into the RS232C port until it contacts the back of the RS232C port.**

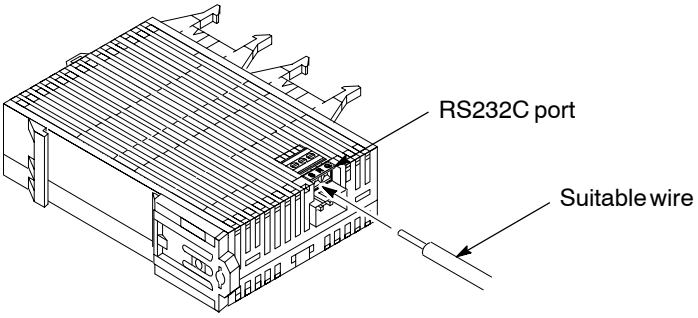

3. **Tighten the screw clockwise to fix the wire in place.**

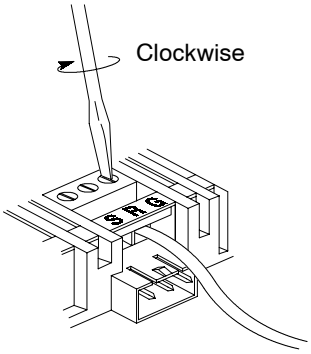

☞ Notes

- **When removing the wire's insulation, be careful not to scratch the core wire.**
- **Do not twist the wires to connect them.**
- **Do not solder the wires to connect them. The solder may break due to vibration.**
- **After wiring, make sure stress is not applied to the wire.**
- **In the RS232C port terminal construction, if the wire closes upon counter-clockwise rotation, the connection is faulty. Disconnect the wire, check the terminal hole, and then re-connect the wire.**

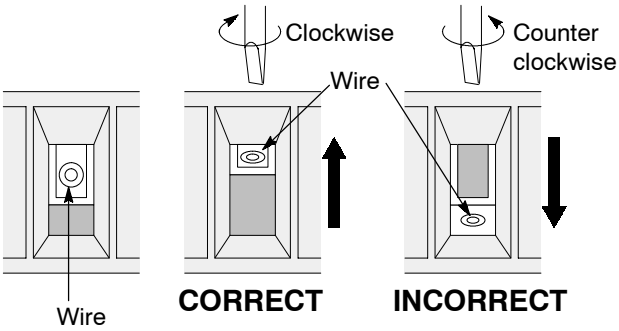

7.9 Wiring the RS232C Port

Chapter 8

Connecting the I.O.P. Display Panel

8.1 Connecting the I.O.P. D01/D30/M01/M30 . . . . 8 - 3

8.1.1 Connection Using the RS232C Port . . . . . 8 - 3

8.1.2 Connection Using the Tool Port . . . . . 8 - 4

8.2 Connecting the I.O.P. B01/B30 . . . . . 8 - 5

8.2.1 Connection Using the RS232C Port . . . . . 8 - 5

8.2.2 Connection Using the Tool Port . . . . . 8 - 6

8.1 Connecting the I.O.P. D01/D30/M01/M30

8.1.1 Connection Using the RS232C Port

It is possible to input data and output data with an external device (I.O.P. D01/D30/M01/M30) using the RS232C port.

When connecting to the I.O.P., set the system registers 412 to 414 according to the following chart. For more complete details, refer to the * FP0 Programming Manual.

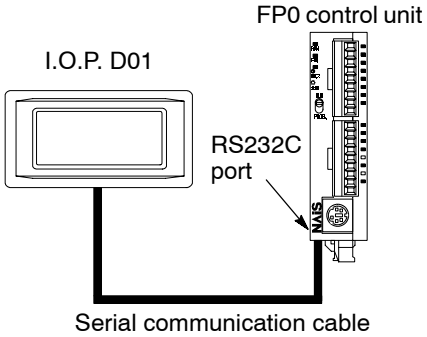

System register	Setting
412	K1 (Computer Link)
413	Header: without STX code Terminator: CR Stop bit: 1 bit Parity check: Odd Character bits: 8 bits
414	Baud rate: 19,200 bps

Serial communication cable

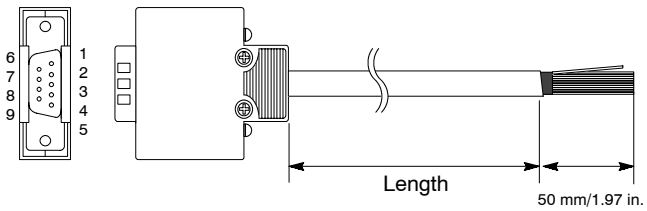

Pin no.	Abbreviation	Wire color	Dotted line color
1	N.C.	Orange	Red
2	SD	Orange	Blue
3	RD	Gray	Red
4	RS	Gray	Blue
5	CS	White	Red
6	N.C.	—	—
7	SG	White	Blue
8	N.C.	—	—
9	N.C.	—	—

Length	Order number
1 m/3.28 ft	AIP81841
2 m/6.56 ft	AIP81842

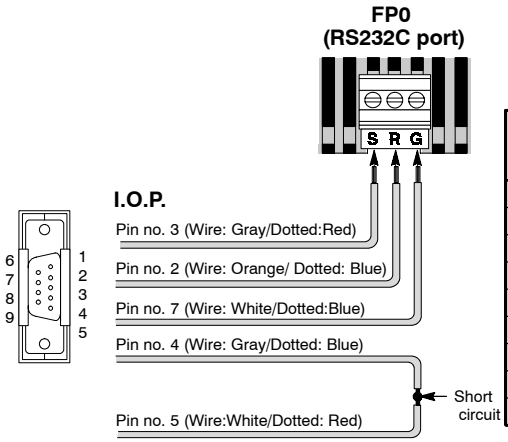

I.O.P.

Pin no.	Abbreviation		
	D01 M01	D30	M30
1	N.C.	N.C.	N.C.
2	SD	SD	SD
3	RD	RD	RD
4	RS	RS	RS
5	CS	CS	CS
6	SG	N.C.	N.C.
7	SG	SG	SG
8	N.C.	N.C.	N.C.
9	N.C.	ER	N.C.

FP0 (RS232C port)

Pin no.	Abbreviation
S	SD
R	RD
G	SG

8.1.2 Connection Using the Tool Port

It is possible to input data and output data with an external device (I.O.P. D01/D30/M01/M30) using the tool port.

When connecting to the I.O.P., set the system registers 411 and 414 according to the following chart. For more complete details, refer to the * FP0 Programming Manual.

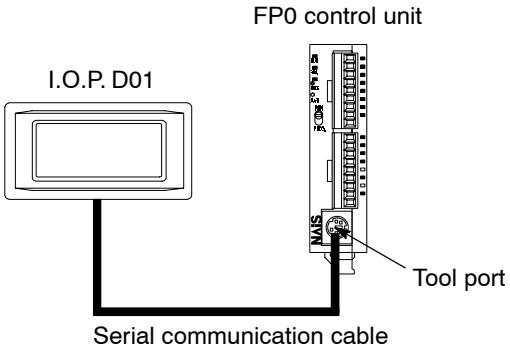

System register	Setting
411	Modem communication: Enabled Character bits: 8 bits
414	Baud rate: 19,200 bps

Serial communication cable (order number: AIP81862M)

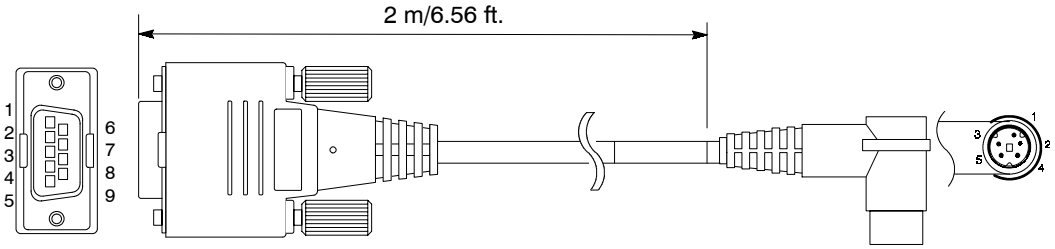

I.O.P.

Pin no.	Abbreviation		
	D01 M01	D30	M30
1	N.C.	N.C.	N.C.
2	SD	SD	SD
3	RD	RD	RD
4	RS	RS	RS
5	CS	CS	CS
6	SG	N.C.	N.C.
7	SG	SG	SG
8	N.C.	N.C.	N.C.
9	N.C.	ER	N.C.

FP0 (Tool port)

Pin no.	Abbreviation
1	SG
2	SD
3	RD
4	N.C.
5	+5V

8.2 Connecting the I.O.P. B01/B30

8.2.1 Connection Using the RS232C Port

It is possible to input data and output data with an external device (I.O.P. B01/B30) using the RS232C port.

When connecting to the I.O.P., set the system registers 412 to 414 according to the following chart. For more complete details, refer to the * FP0 Programming Manual.

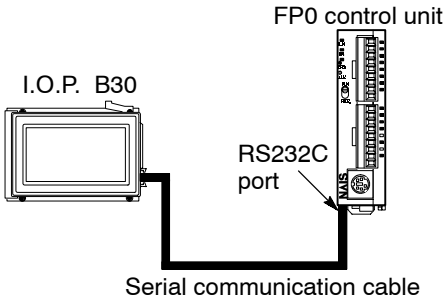

System register	Setting
412	K1 (Computer Link)
413	Header: without STX code Terminator: CR Stop bit: 1 bit Parity check: Odd Character bits: 8 bits
414	Baud rate: 19,200 bps

Serial communication cable

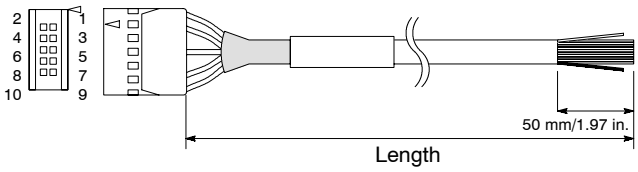

Pin no.	Abbreviation	Wire color	Dotted line color
1	N.C.	Orange	Blue
2	N.C.	Orange	Red
3	SD	Yellow	Blue
4	RD	Yellow	red
5	CS	Pink	Blue
6	RS	Pink	Red
7	SG	Gray	Blue
8	SG	Gray	Red
9	+5V	White	Blue
10	+5V	White	Red

Length	Order number
1 m/3.28 ft	AIB81201
2 m/6.56 ft	AIB81202

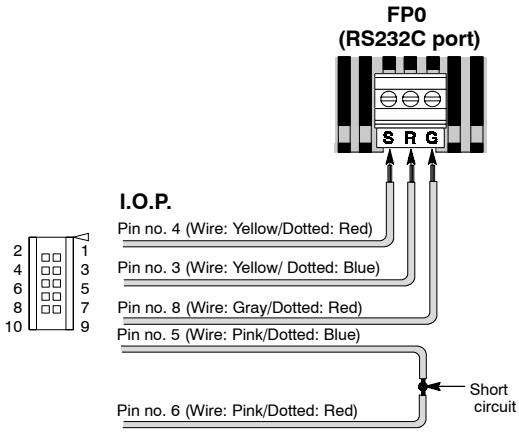

I.O.P.

Pin no.	Abbreviation
1	N.C.
2	N.C.
3	SD
4	RD
5	CS
6	RS
7	SG
8	SG
9	+5V
10	+5V

FP0 (RS232C port)

Pin no.	Abbreviation
S	SD
R	RD
G	SG

8.2.2 Connection Using the Tool Port

It is possible to input data and output data with an external device (I.O.P. B01/B30) using the tool port.

When connecting to the I.O.P., set the system registers 411 and 414 according to the following chart. For more complete details, refer to the *FP0 Programming Manual.

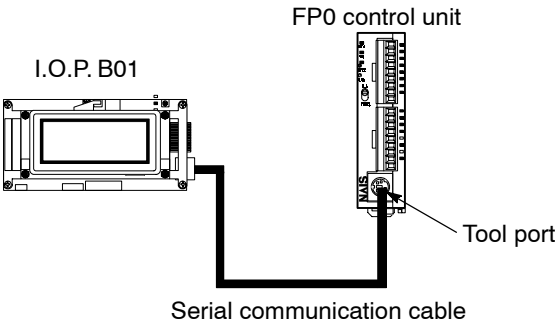

System register	Setting
411	Modem communication: Enabled Character bits: 8 bits
414	Baud rate: 19,200 bps

Serial communication cable (order number: AIB81222)

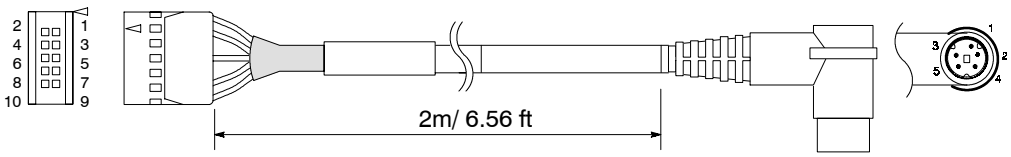

I.O.P.

Pin no.	Abbreviation
1	N.C.
2	N.C.
3	SD
4	RD
5	CS
6	RS
7	SG
8	SG
9	+5V
10	+5V

FP0 (Tool port)

Pin no.	Abbreviation
1	SG
2	SD
3	RD
4	N.C.
5	+5V

Chapter 9

Trial Operation

9.1 Before Turning ON the Power . . . . . 9 - 3

9.2 Turning the Power ON . . . . . 9 - 4

9.1 Before Turning ON the Power

After wiring, be sure to check the items below before turning ON the power supply to the programmable controller.

Item	Description
Unit mounting status	• Does the unit type match the device list during the design stage? • Are all of the units firmly fixed?
Power supply	• Is operating voltage supplied correctly ? • Is the power supply cable properly connected?
Check input/output terminals	• Does the wiring of connector and terminal match ? • Is the operating voltage of I/O correct ? • Are the connector of I/O properly connected ? • Is the wire size correct ?
Setting of control unit	• Is the mode switch set to the PROG. mode ?

9.2 Turning the Power ON

After checking the items given in the previous page, perform the trial operation by following procedure.

Procedure:

1. **Before turning ON the power, check the items described on the previous page**
2. **Turn ON the power**
3. **Check that the control unit's PROG. LED is ON**
4. **Enter the program**

   When using a programming tool, perform the operation "Clear Program" before inputting. Enter the program using NPST-GR software or the FP programmer II Ver.2. Use the proramming tool's "total check function" to check for syntax errors.
5. **Check output wiring**

   Use the forced output function to check the output wiring.
6. **Check input wiring**

   Check the input wiring by watching the ON/OFF status of the input state LEDs or by using the monitoring function of the programming tool.
7. **Switch the mode switch from PROG. to RUN mode**
8. **If the RUN LED turns ON, check the operation of the program**
9. **Edit the program (debug) if necessary**

   If there is an error in the operation, check the program using the monitoring function of the programming tool. And then correct the program.
10. **Save the edited program**

    We highly recommend to save the created program onto a floppy disk.

Chapter 10

Self-Diagnostic and Troubleshooting

10.1 Self-Diagnostic Function . . . . . 10 - 3

10.1.1 Allowing Duplicated Output . . . . . 10 - 4

10.1.2 Continuing After an Operation Error 10 - 4

10.2 Troubleshooting . . . . . 10 - 5

10.2.1 ERROR/ALARM LED is Blinking . . . 10 - 5

10.2.2 ERROR/ALARM LED is ON . . . . . 10 - 7

10.2.3 All LEDs are OFF . . . . . 10 - 7

10.2.4 Diagnosing Output Malfunction . . . . 10 - 8

10.2.5 Communication Error with Programming Software . . . . . 10 - 10

10.2.6 PROTECT ERROR is Displayed . . 10 - 11

10.2.7 Program Mode does not Change to RUN . . . . . 10 - 11

10.3 Error Codes . . . . . 10 - 12

10.3.1 Total-Check Function . . . . . 10 - 12

10.3.1.1 Syntax Check Error . . . . . 10 - 12

10.3.1.2 Self-Diagnostic Error . . . . 10 - 13

10.3.2 Syntax Check Error Codes . . . . . 10 - 14

10.3.3 Self-Diagnostic Error Codes . . . . . 10 - 15

10.1 Self-Diagnostic Function

The FP0 control unit has a self-diagnostic function which identifies errors and stops operation if necessary. When an error occurs, the status of the status indicator LEDs on the FP0 control unit vary, as shown in the table.

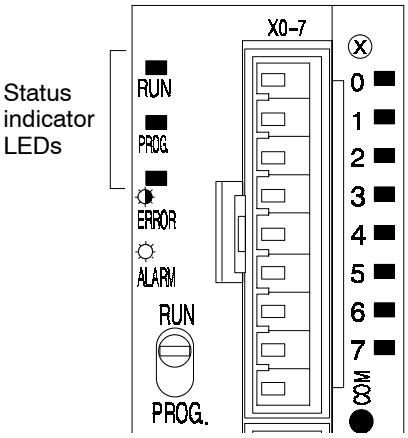

Condition	LED status			Description	Program execution status
	RUN	PROG.	ERROR/ALARM		
Normal condition	ON	OFF	OFF	Normal operation in RUN mode	Operation
	OFF	ON	OFF	Normal operation in PROG. mode	Stop
	Blink	OFF	OFF	Forcing ON/OFF in RUN mode	Operation
Abnormal condition	ON	OFF	Blink	When a self-diagnostic error occurs	Operation
	OFF	ON	Blink		Stop
	Varies	Varies	ON	When a system watchdog timer error occurs	Stop

Normally, if an error occurs, operation of FP0 stops.

The user may select whether operation is to be continued or stopped if a duplicate output error or operation error occurs, by setting the system registers. You can set the system registers with NPST-GR software.

10.1.1 Allowing Duplicated Output

When you change system register 20 settings (“ENAB”) using the programming software, duplicated output is not regarded as an error and the FP0 continues to operate.

10.1.2 Continuing After an Operation Error

When you change system register 26 settings (“CONT”) using the programming software, the FP0 continues to operate. In this case, even if the FP0 continues to operate, this is regarded as an error.

10.2 Troubleshooting

10.2.1 ERROR/ALARM LED is Blinking

<Condition>
The self-diagnostic error occurs.

<Procedure 1 >
Check the error code using the programming tool.

Using NPST-GR software
In the ONLINE mode, select “STATUS DISPLAY.” At the bottom of the “STATUS DISPLAY” window, you can find the error code.

SLF DIAGN ERR CD ( ) [ ]

Error code Content of error

Using FPSOFT
In the ONLINE mode, select “Monitor” from the menu bar of FPSOFT. And then select “Status Display”. At the “PLC Error Flag” field, self-diagnostic error code is displayed.

Using FP programmer II
Press the keys on the FP programmer II as shown on the right.

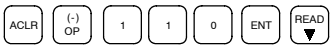

When self-diagnostic error occurs, the screen shown on the right is displayed.

```
OP-   110
FUNCTION ERR E45
```

Error code is 1 to 9

<Condition>
There is a syntax error in the program.

<Procedure 1 >
Change to PROG. mode and clear the error.

<Procedure 2>
Execute a total-check function to determine the location of the syntax error.

Refer to your software manual, for details about the total-check method.

☞ **next page**

Error code is 20 or higher

<Condition>

A self-diagnostic error other than a syntax error has occurred.

<Procedure 1 >

Use the programming tool in PROG. mode to clear the error.

Using NPST-GR software

Press the **<F3>** key in the status display menu described on the previous page. Error code 43 and higher can be cleared.

Using FPSOFT

Click the “Clear Error” button in the status display menu described on the previous page.

Using FP programmer II

Press the keys as shown on the right. ACLR (-) OP 1 1 2 ENT SHIFT SC (DELT) INST

Error code 43 and higher can be cleared.

- In the PROG. mode, the power supply can be turned OFF and then ON again to clear the error, but all of the contents of the operation memory except hold type data are cleared.
- An error can also be cleared by executing a self-diagnostic error set instruction **F148 (ERR)**.

<Procedure 2>

Follow the procedures described in the table of error codes (* section 10.3.3).

☞ **Note**

When an operation error (error code 45) occurs, the address at which the error occurred is stored in special data registers DT9017 and DT9018. If this happens, monitor the address at which the error occurred before cancelling the error.

10.2.2 ERROR/ALARM LED is ON

<Condition>

The system watchdog timer has been activated and the operation of FP0 has been stopped.

<Procedure 1 >

Set the mode switch from RUN to PROG. and turn the power OFF and then ON.

If the ERROR/ALARM LED is turned ON again, there is probably an abnormality in the FP0. Please contact your dealer.

If the ERROR/ALARM LED is blinked, go to section 10.2.1.

<Procedure 2>

Set the mode switch from PROG. to RUN.

If the ERROR/ALARM LED is turned ON, the program execution time is too long. Check:

- if instructions such as **JP** or **LOOP** are programmed in such a way that a scan can never finish.
- that interrupt instructions are executed in succession.

10.2.3 All LEDs are OFF

<Procedure 1 >

Check the power supply wiring.

<Procedure 2>

Check if the power supplied to the FP0 control unit is in the range of the rating.

Be sure to check the fluctuation in the power supply.

<Procedure 3>

Disconnect the power supply wiring to the other devices if the power supplied to the FP0 control unit is shared with them.

If the LEDs on the FP0 control unit turn ON at this moment, the capacity of the power supply is not enough to control other devices as well.

Prepare another power supply for other devices or increase the capacity of the power supply.

10.2.4 Diagnosing Output Malfunction

Check of output condition (output indicator LEDs are ON)

<Procedure 1 >

Check the wiring of the loads.

↓

<Procedure 2>

Check if the power is properly supplied to the loads.

If the power is properly supplied to the load, there is probably an abnormality in the load. Check the load again.

If the power is not supplied to the load, there is probably an abnormality in the FP0's output circuit. Please contact your dealer.

Check of output condition (output indicator LEDs are OFF)

<Procedure 1 >

Monitor the output condition using a programming tool.

If the output monitored is turned ON, there is probably a duplicated output error.

↓

<Procedure 2>

Forcing ON the output using a programming tool.

If the output indicator LED is turned ON, go to input condition check.

If the output indicator LED remains OFF, there is probably an abnormality in the FP0's output circuit. Please contact your dealer.

Check of input condition (input indicator LEDs are OFF)

<Procedure 1 >

Check the wiring of the input devices.

↓

<Procedure 2>

Check that the power is properly supplied to the input terminals.

If the power is properly supplied to the input terminal, there is probably an abnormality in the FP0's input circuit. Please contact your dealer.

If the power is not properly supplied to the input terminal, there is probably an abnormality in the input device or input power supply. Check the input device and input power supply.

Check of input condition (input indicator LEDs are ON)

<Procedure >

Monitor the input condition using a programming tool.

If the input monitored is OFF, there is probably an abnormality in the FP0's input circuit. Please contact your dealer.

If the input monitored is ON, check the program again.
Also, check the leakage current at the input devices (e.g., two-wire type sensor) and check for the duplicated use of output or the program flow when a control instruction such as **MC** or **JP** is used.

Check the settings of the I/O allocation.

10.2.5 Communication Error with Programming Software

<Procedure 1 >

Check if the baud rate and character bits settings of the FP0 and NPST-GR software are the same.

NPST-GR software baud rate setting

<If you are using MENU 1 screen type>

Open [NPST MENU] by pressing the **<Esc>** key, then select “NPST CONFIGURATION” to skip to the [NPST CONFIGURATION] subwindow. In the [NPST CONFIGURATION] subwindow, select “1. NPST CONFIGURATION.”

<If you are using MENU 2 screen type>

Open [NPST FUNCTION MENU] by pressing the **<Esc>** key, then select “Z. NPST CONFIGURATION.”

In this window, you can find the baud rate as shown below:

TRNS RATE (bps) [19200 / 9600 / 4800 / 2400 / 1200 / 600 / 300]

Select a baud rate (9600), press the **<F1>** key and select “SAVE DISK ? YES” to register this change onto the disk.

Settings on the FP0 side

The baud rate of the FP0 control unit is factory set to 9,600 bps.

<Procedure 2>

Check the FP PC cable and RS232C port adapter.

RS232C port adapter : Needs to be customized to match your computer.

<Procedure 3>

Confirm the setting of the computer referring to the manual for your computer.

Set your computer’s RS232C parameter to asynchronous.

10.2.6 PROTECT ERROR is Displayed

When a password is set for the programmable controller

<Procedure >

Enter a password in the password setting menu in the NPST-GR software and select enable.

Open [NPST MENU] by pressing the **<Esc>** key, and then select “PLC CONFIGURATION” to skip to the [PLC CONFIGURATION] window. In the [PLC CONFIGURATION] window, select “SET PLC PASSWORD”

Enter the password and select enable (ENAB).

10.2.7 Program Mode does not Change to RUN

<Condition>

A syntax error has occurred.

↓

<Procedure >

Execute a total-check function to determine the location of the syntax error.

Refer to your software manual, for details about the total-check method.

10.3 Error Codes

10.3.1 Total-Check Function

When the ERROR/ALARM LED on the FP0 control unit is blinking, a self-diagnostic error or syntax check error has occured. Verify the contents of the error and take the appropriate steps.

Error confirmation procedure:

1. **Use the programming tool to call up the error code**
   - Using NPST-GR software:
     By executing the STATUS DISPLAY, the error code and content of error are displayed.
   - Using FP programmer II Ver. 2:
     With the syntax check error, the error code and message is displayed by simply connecting the unit.
     With the self-diagnostic error, press the folowing keys.
     ACLR (-) OP 1 1 0 ENT READ ▼
     Then the self-diagnostic error code will be displayed.
2. **Check the error contents in the error code list of section 10.3.2 and 10.3.3 using the error code ascertained above.**

10.3.1.1 Syntax Check Error

This is an error detected by the total-check function when there is a syntax error or incorrect setting written in the program. When the mode switch of control unit is switched to the RUN mode, the total-check function automatically activates and eliminates the possibility of incorrect operation from syntax check errors in the program.

When a syntax check error is detected

- ERROR/ALARM LED begins blinking.
- Operation will not begin even after switching to the RUN mode.
- Remote operation cannot be used to change to RUN mode.

Clearing a syntax error

By changing to the PROG. mode, the error will clear and the ERROR/ALARM LED will turn OFF.

Steps to take for syntax error

- Change to PROG. mode, and then execute the total-check function while on-line with the programming tool connected. This will call up the error contents and the address at which the error occurred.
- Correct the program while referring to the error contents.

10.3.1.2 Self-Diagnostic Error

This error occurs when the contoller's self-diagnostic function detects the occurence of an abnormality in the system. The self-diagnostic function monitors the memory abnormal detection, I/O abnormal detection, and other devices.

When the self-diagnostic error occurs

- ERROR/ALARM LED begins blinking.
- The operation of the controller might stop depending on the content of error and the system resister setting.
- The error codes will be stored in the special data resister DT9000.
- In the case of operation error, the error address will be stored in the DT9017 and DT9018.

Clearing the self-diagnostic error

- Using NPST-GR software

  At the STATUS MENU, press the **<F3>** key. Error codes 43 and higher can be cleared.

- Using FP programmer II Ver. 2

  Press the keys as shown below. Error codes 43 and higher can be cleared.

  ACLR (-) OP 1 1 2 ENT SHIFT SC WRT

- Errors can also be cleared by turning OFF an ON the power while in the PROG. mode. However, memory contents, not stored with the hold type data, will also be cleared.
- The error can also be cleared depending on the self-diagnostic error set instruction **F148(ERR)**.

Steps to take for self-diagnostic error

The steps to be taken will differ depending on the error contents. For more details, use the error code obtained above and refer to section 10.3.3.

10.3.2 Syntax Check Error Codes

Error code	Name of error	Operation status	Description and steps to take
E1	**Syntax error (SYNTAX)**	Stops	A program with a syntax error has been written. **Change to PROG. mode and correct the error.**
E2	**Duplicated output error (DUP USE)**	Stops	Two or more **OT(Out)** instructions and **KP(Keep)** instructions are programmed using the same relay. This error also occurs if you are the same timer/counter numbers. **Correct the program so that one relay is not used for two or more OT(Out) instructions and KP(Keep) instructions. Or, set the double output to "K1: enable" in system register 20.**
E3	**Not paired error (PAIR)**	Stops	For instructions which must be used in a pair such as jump (**JP** and **LBL**), one instruction is either missing or in an incorrect position. **Change to PROG. mode and enter the two instructions which must be used in a pair in the correct positions.**
E4	**System register parameter error (Mismatch)**	Stops	An instruction has been written which does not agree with system register settings. For example, the number specification in a program does not agree with the timer/counter range setting. **Change to PROG. mode, check the system register settings, and change so that the settings and the program agree.**
E5	**Program area error (PRG AREA)**	Stops	An instruction which must be written to a specific area (main program area or subprogram area) has been written to a different area (for example, a subroutine **SUB** to **RET** is placed before an **ED** instruction). **Change to PROG. mode and enter the instruction into the correct area.**
E8	**Operand error (OPR COMBI)**	Stops	There is an incorrect operand in an instruction which requires a specific combination operands (for example, the operands must all be of a certain type). **Enter the correct combination of operands.**

10.3.3 Self-Diagnostic Error Codes

Error code	Name of error	Operation status	Description and steps to take
E31	**Interrupt error 1**	Stops	An interrupt occurred without an interrupt request. A hardware problem or error due to noise is possible. **Turn OFF the power and check the noise conditions.**
E32	**Interrupt error 2**	Stops	An interrupt occurred without an interrupt request. A hardware problem or error due to noise is possible. **Turn OFF the power and check the noise conditions.**
			There is no interrupt program for an interrupt which occurred. **Check the number of the interrupt program and change it to agree with the interrupt request.**
E45	**Operation error**	Selects	Operation became impossible during a high-level instruction. The cause of the operation error varies depending on the instruction. In system register 26, select “1: Continue operation” or “0: Stop”
E100 to E199	**Self-diagnostic error set by F148 (ERR) instruction**	Stops	The error set using high-level instruction **F148(ERR)** has occurred. **Clear the error based on the set detection conditions**
E200 to E299		Continues	

Appendix A

Dimensions

A.1 Control Unit and Expansion I/O Unit . . . . . A - 3

A.1.1 FP0-C10RS/C10CRS/C14RS/ C14CRS/E8RS/E16RS . . . . . A - 3

A.1.2 FP0-C10RM/C10CRM/C14RM/ C14CRM/E8RM/E16RM . . . . . A - 3

A.1.3 FP0-C16T/C16CT/C16P/C16CP/ E16T/E16P/E8X/E8YT/E8YP . . . . . A - 4

A.1.4 FP0-C32T/C32CT/C32P/C32CP/ E32T/E32P/E16X/E16YT/E16YP . . . A - 4

A.2 Analog I/O Unit . . . . . A - 5

A.3 Mounting on DIN Rail . . . . . A - 6

A.4 FP0 Slim Type Mounting Plate . . . . . A - 7

A.5 FP0 Flat Type Mounting Plate . . . . . A - 8

A.1 Control Unit and Expansion I/O Unit

A.1.1 FP0-C10RS/C10CRS/C14RS/C14CRS/E8RS/E16RS

Illustration: FP0-C14RS

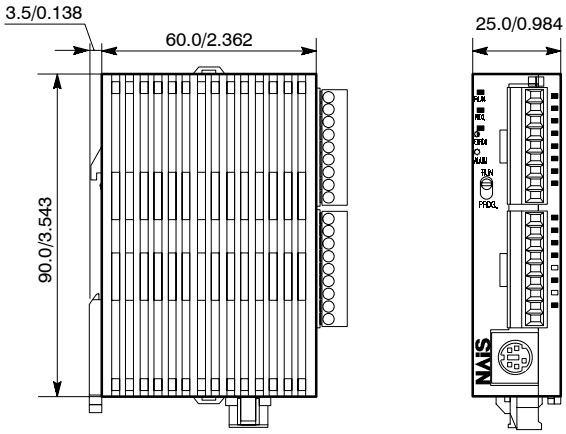

Reference measurements for wiring

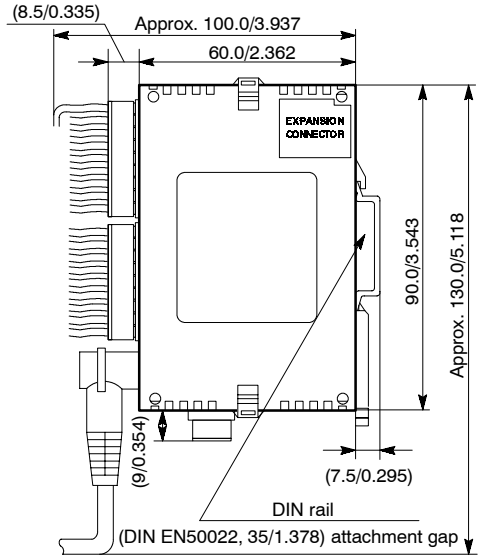

(unit: mm/in.)

A.1.2 FP0-C10RM/C10CRM/C14RM/C14CRM/E8RM/E16RM

Illustration: FP0-C14RM

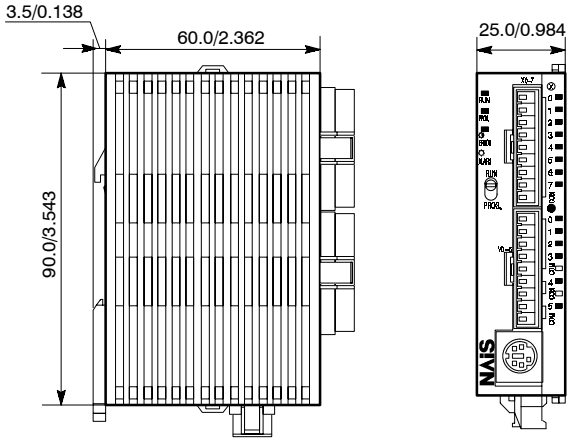

Reference measurements for wiring

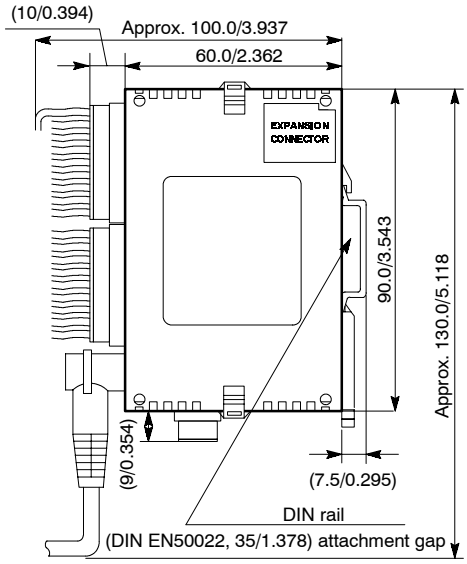

(unit: mm/in.)

A.1.3 FP0-C16T/C16CT/C16P/C16CP/E16T/E16P/E8X/E8YT/E8YP

Illustration: FP0-C16T

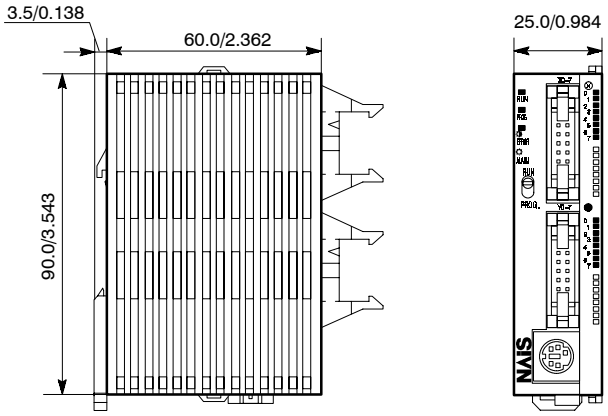

Reference measurements for wiring

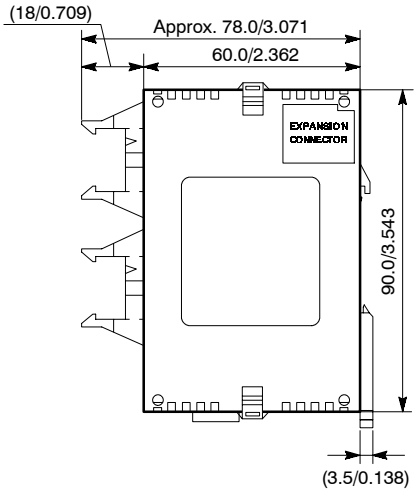

(unit: mm/in.)

A.1.4 FP0-C32T/C32CT/C32P/C32CP/E32T/E32P/E16X/E16YT/E16YP

Illustration: FP0-C32T

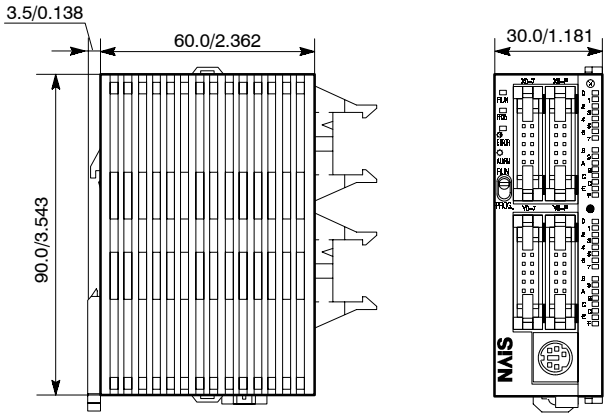

Reference measurements for wiring

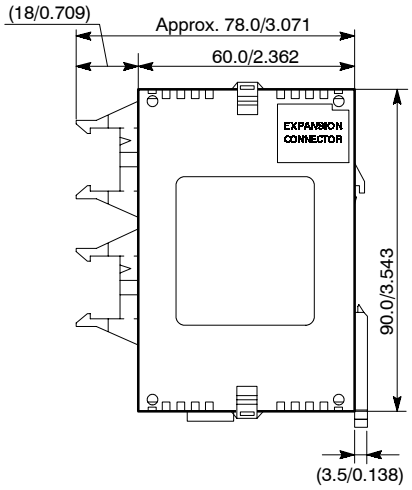

(unit: mm/in.)

A.2 Analog I/O Unit

Illustration: FP0-A21

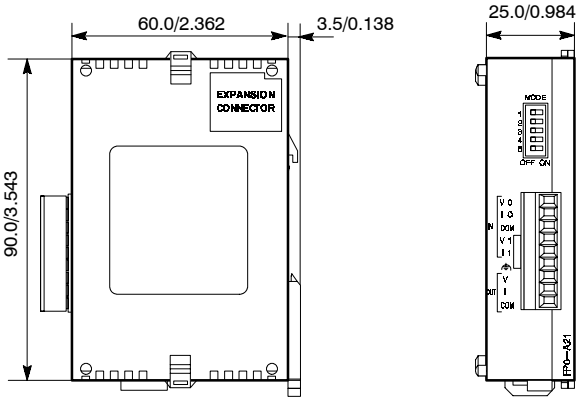

(unit: mm/in.)

A.3 Mounting on DIN Rail

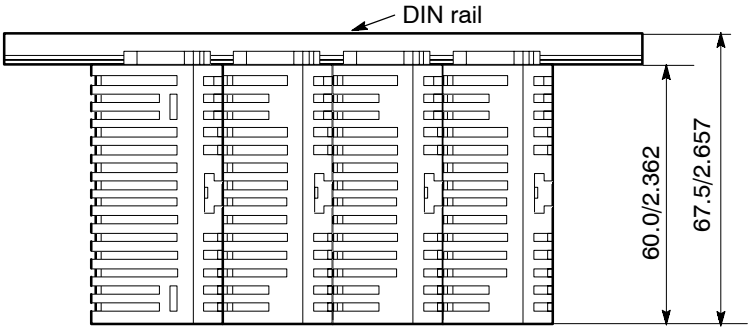

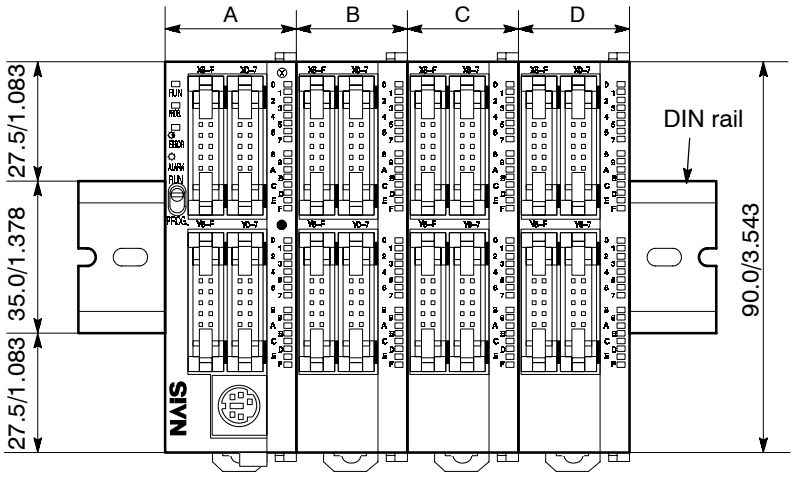

(unit: mm/in.)

☞ Note

A + B +C + D dimensions (Unit: mm/in.)

Control unit type	A (Control unit only)	A+B (1 expansion unit connected)	A+B+C (2 expansion units connected)	A+B+C+D (3 expansion units connected)
C10RS, C10CRS, C10RM, C10CRM, C14RS, C14CRS, C14RM, C14CRM, C16T, C16CT, C16P, C16CP	25/0.984	50/1.969	75/2.953	100/3.937
C32T, C32CT, C32P, C32CP	30/1.181	55/2.165	80/3.150	105/4.134

A.4 FP0 Slim Type Mounting Plate

One plate

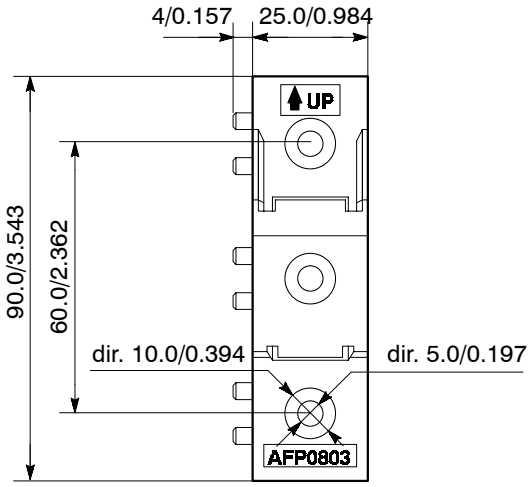

(unit: mm/in.)

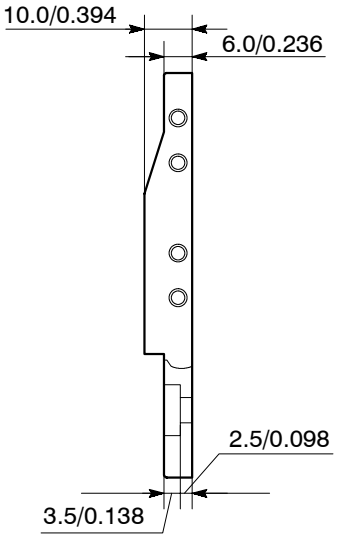

(unit: mm/in.)

Four plates in series

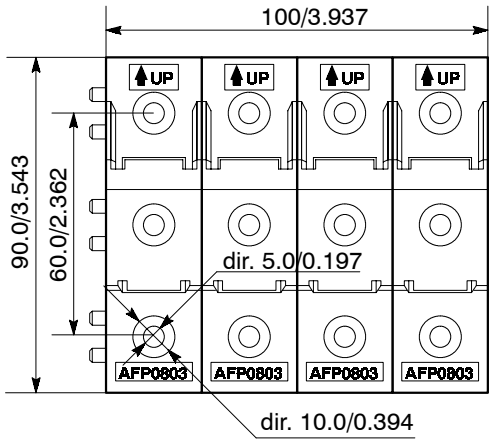

Mounting hole dimensions

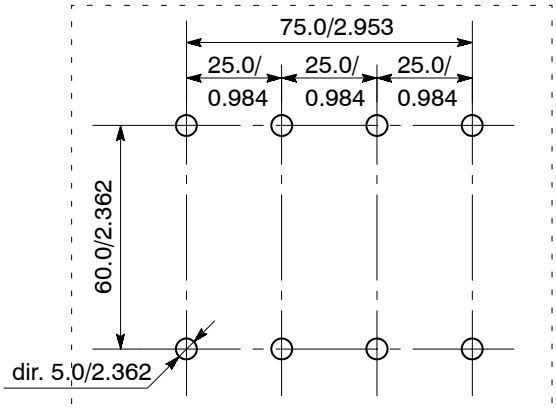

After joining all of the FP0 slim type mounting plates to be connected, tighten the corner screws.

(unit: mm/in.)

Dimensions when using FP0 slim type mounting plate

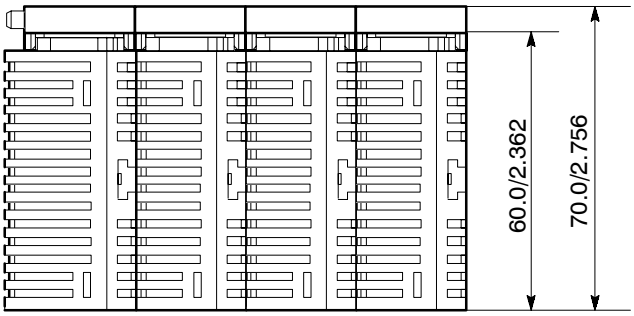

(unit: mm/in.)

A.5 FP0 Flat Type Mounting Plate

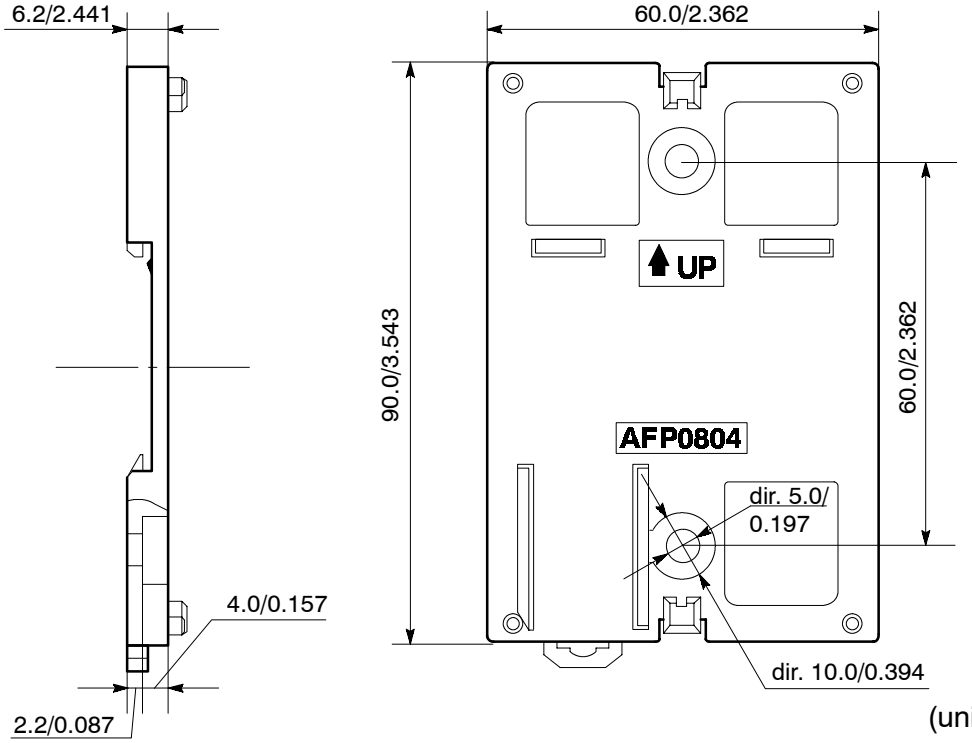

(unit: mm/in.)

Mounting hole dimensions

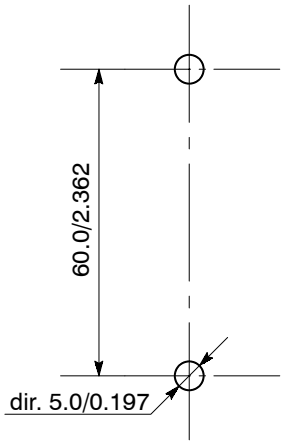

Dimensions when mounted on DIN rail

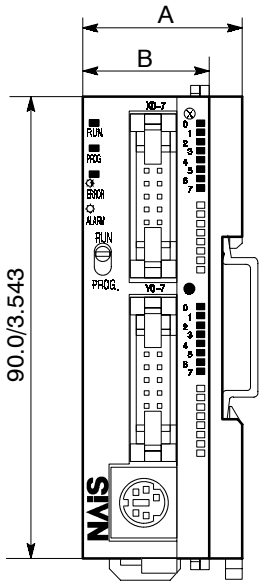

Unit type	A (mm/in.)	B (mm/in.)
C10RS C10CRS C10RM C10CRM C14RS C14CRS C14RM C14CRM C16T C16CT C16P C16CP	31.2/1.23	25/0.98
C32T C32CT C32P C32CP	36.2/1.43	30/1.18

(unit: mm/in.)

☞ **Note**

Cannot be used if system is expanded

Index

A

A/D conversion characteristics, 4 - 9
analog I/O unit, 1 - 5
analog input range, 4 - 4
analog input wiring, 4 - 13
analog mode switch, 4 - 4
analog output range, 4 - 4
analog output wiring, 4 - 14
averaging function, 4 - 17

B

baud rate, 7 - 19, 10 - 10

C

communication error, 10 - 10
connecting the I.O.P., 8 - 3, 8 - 5
control units, 1 - 3
crimping tool, 7 - 15
current consumption, 2 - 8

D

D/A conversion characteristics, 4 - 12
dimensions, A - 3 to A - 8
duplicated output error, 10 - 14

E

error, 10 - 3, 10 - 12
error codes, 10 - 12
ERROR/ALARM LED, 10 - 3, 10 - 5, 10 - 7
expansion I/O units, 1 - 4
expansion method, 6 - 3

F

FP programmer II Ver. 2, 1 - 9

G

grounding, 7 - 7

I

I/O allocation, 5 - 4 to 5 - 6
I/O number, 5 - 3 to 5 - 6
I/O points, 1 - 6 to 1 - 8
input wiring, 7 - 8
installation, 6 - 5
internal circuit diagram, 2 - 18, 3 - 10

M

MIL connector, 7 - 17
mode switch, 2 - 5, 2 - 6
MOLEX connector, 7 - 15
momentary power failures, 7 - 4
mounting plate, 6 - 9, 6 - 10

N

noise, 7 - 7

O

output wiring, 7 - 11

P

pin layouts, 2 - 22, 3 - 18
pressure connection tool, 7 - 17
PROTECT ERROR, 10 - 11

R

RS232C port, 2 - 5, 7 - 19

S

safety instructions, 7 - 3
screwdriver, 7 - 13, 7 - 20
self-diagnostic error, 10 - 3, 10 - 13
self-diagnostic error codes, 10 - 15
self-diagnostic function, 10 - 3, 10 - 13
sensors, 7 - 8
suitable wires, 7 - 13, 7 - 15, 7 - 17, 7 - 19
supplied connector, 7 - 15, 7 - 17
syntax check error, 10 - 12
syntax check error codes, 10 - 14

T

terminal block socket, 7 - 13
tool port, 2 - 5, 2 - 6
total-check function, 10 - 12

W

watchdog timer, 10 - 7
wiring the power supply, 7 - 5

Record of changes

ACG No.	Date	Description of Changes
ACG-M0084-1	JAN. 1997	First edition
ACG-M0084-2	JUL. 1997	2nd edition • Size change (from A5 to B5) • Newly addition of FP0 transistor output type information
ACG-M0084-3	JUN. 1998	3rd edition • Descriptions for FP0 control units with RS232C port are added. • Descriptions for FP0 input only and output only type expansion units are added. • Descriptions for FP0 analog I/O unit is added.

Please contact .....

Matsushita Electric Works, Ltd.

AUTOMATION CONTROLS GROUP

■ Head Office: 1048, Kadoma, Kadoma-shi, Osaka 571-8686, Japan

■ Telephone: Japan (81) Osaka (06) 908 - 1050

■ Facsimile: Japan (81) Osaka (06) 908 - 5781

COPYRIGHT© 1998 All Rights Reserved

ACG-M0084-3 JUN. 98 3Ya

Specifications are subject to change without notice.

Printed in Japan.